Aeli Tec

São Paulo, 01 de Novembro de 2023

Camara Municipal de Sorocaba
PREGÃO N.° 25/2023

Item 1 –WORKSTATION

Modelo: HP Z8 G5
Qtde: 02
Fabricante: HP
Procedencia : Nacional / Brasil

Descrição:
HP Z8 G5
Intel Xeon 5415+ 8C 150W CPU
128GB(4x32GB) DDR5 4800 DIMM ECC
NVIDIA RTX A4500 20GB GDDR6
HP 512GB PCIe-4x4 2280 Value M.2 Solid State Drive
3 x 4TB 7200RPM SATA 3.5in WKS
Teclado e mouse USB
DVD RW
Windows 11 pro
Garantia 3 anos on site prestada pelo fabricante e demais especificações conforme termo de referência.

AV	Description
7F6D7AV	HP Z8 TWR Base Unit G5 1450W 100V/20A RCTO Brazil
4YQ39AV#AC4	OS Localization
4X3S8AV	Windows 11 Pro 64 for Workstations 6 Cores Plus
3F4K4AV	Operating System Load to M.2
3F4D7AV	Intel Xeon 5415+ 4.10G 22.5MB 8 cores 150W CPU
3F4L6AV	128GB (4x32GB) DDR5 4800 DIMM ECC REG 1CPU Memory
616C9AV	NVIDIA RTX A4500 20 GB GDDR6 4DP Graphics
3F3B9AV	Z Turbo 512GB PCIe-4x4 2280 TLC M.2 Solid State Drive
3F4F8AV	4TB 7200RPM SATA 3.5in Enterprise
3F4F9AV	4TB 7200RPM SATA 3.5in Enterprise 2nd
3F4G0AV	4TB 7200RPM SATA 3.5in Enterprise 3rd
77A88AV#AK4	HP 125 BLK Wired Keyboard
4N398AV	HP Wired 128 LSR Mouse
3F4K2AV	9.5mm DVD-Writer 1st ODD
6U7A8AV	Type-A SuperSpeed USB 5Gbps Front IO v2 Entry Module
3F4P9AV#ABM	WARR 3/3/3 LTNA
63G43AV#AK4	C13 Sticker Conventional Straight Desktop Workstations Power Cord
2PA20AV	HP miniDP-to-DP Adapter
3F4J2AV	Single Unit (Tower) Packaging
3F3D9AV#AK4	Z8 Country Kit

AeliTec

Item 2 –WORKSTATION

Modelo: HP Z8 G5
Qtde: 01
Fabricante: HP
Procedencia : Nacional / Brasil

Descrição:
HP Z8 G5
Intel Xeon 5415+ 8C 150W CPU
64GB(2x32GB) DDR5 4800 DIMM ECC
NVIDIA RTX A2000 12GB GDDR6
HP 512GB PCIe-4x4 2280 Value M.2 Solid State Drive
3 x 2TB 7200RPM SATA 3.5in WKS
Teclado e mouse USB
DVD RW
Windows 11 pro
Garantia 3 anos on site prestada pelo fabricante e demais especificações conforme termo de referência.

AV	Description
7F6D7AV	HP Z8 TWR Base Unit G5 1450W 100V/20A RCTO Brazil
4YQ39AV#AC4	OS Localization
4X3S8AV	Windows 11 Pro 64 for Workstations 6 Cores Plus
3F4K4AV	Operating System Load to M.2
3F4D7AV	Intel Xeon 5415+ 4.10G 22.5MB 8 cores 150W CPU
3F4N2AV	64GB (2x32GB) DDR5 4800 DIMM ECC REG 1CPU Memory
407T8AV	NVIDIA RTX A2000 12 GB GDDR6 4mDP Graphics
3F3B9AV	Z Turbo 512GB PCIe-4x4 2280 TLC M.2 Solid State Drive
3F4F0AV	2TB 7200RPM SATA 3.5in Enterprise
3F4F1AV	2TB 7200RPM SATA 3.5in Enterprise 2nd
3F4F2AV	2TB 7200RPM SATA 3.5in Enterprise 3rd
77A88AV#AK4	HP 125 BLK Wired Keyboard
4N398AV	HP Wired 128 LSR Mouse
3F4K2AV	9.5mm DVD-Writer 1st ODD
6U7A8AV	Type-A SuperSpeed USB 5Gbps Front IO v2 Entry Module
3F4P9AV#ABM	WARR 3/3/3 LTNA
63G43AV#AK4	C13 Sticker Conventional Straight Desktop Workstations Power Cord
2PA20AV	HP miniDP-to-DP Adapter
3F4J2AV	Single Unit (Tower) Packaging
3F3D9AV#AK4	Z8 Country Kit

Aeli Tec

Proposta Comercial

Item	Qde	Modelo	Preço Unitário R$	Preço Total R$
01	02	HP Workstation Z8 G5 / 128 GB / RTX A4500 / 3 anos on site conforme edital	R$ 64.000,00	R$ 128.000,00
02	01	HP Workstation Z8 G5 / 64GB / RTX A2000 / 3 anos on site conforme edital	R$ 46.500,00	R$ 46.500,00
	Valor total da Proposta = R$ 174.500,00			

Condições Comerciais
Pagamento
Pagamento a 10 dias contados da data de liberação da nota fiscal pelo fiscalizador do contrato.
Impostos
Nos preços propostos estão inclusos todos os impostos incidentes, alíquotas estabelecidas pelas legislações Federais, Estaduais e Municipais até esta data.
Validade da Proposta
Esta proposta por 60 dias
Prazo de Entrega
45 dias
Frete
Incluso para Estado de São Paulo
Garantia
3 anos on site prestado pelo fabricante.

Conta no Banco do Brasil
Ag 300-x
Conta Corrente 137630-6

Dados de Faturamento
Aleli Informática Ltda
CNPJ 24.689.084/0002-61
AV Setecentos S/N Galpão 17 Moduos 13 E 14 Sala 20
CEP 29161-414
Serra – ES

AeliTec

DECLARO que os preços acima indicados contemplam todos os custos diretos e indiretos incorridos na data da apresentação desta proposta incluindo, entre outros, embalagens, tributos, transporte, cargas, encargos sociais, materiais, trabalhistas, previdenciários, comerciais, taxas, despesas administrativas, seguros, fretes, lucros e todas as demais despesas diretas ou indiretas que forem necessárias, decorrentes dos fornecimentos do objeto da presente licitação.

Fabian Bonaldo Alves
CPF : 172.678.428-28
vendas@alelitec.com.br

0175

HP Brasil Indústria e Comércio de
Equipamentos Eletrônicos Ltda.
Alameda Xingu, n.º 350, 8º andar
Alphaville Industrial, Barueri/SP
CEP: 06455-030
Brasil

declaração

Barueri, 05 de Outubro de 2023

Ao/À
CAMARA MUNICIPAL DE SOROCABA

Assunto:
EDITAL DE PREGÃO PRESENCIAL 25/2023

BDI 20742

A **HP BRASIL INDÚSTRIA E COMÉRCIO DE EQUIPAMENTOS ELETRÔNICOS LTDA**. (**HP**), em atendimento ao quanto solicitado pelo Parceiro HP **ALELI INFORMATICA LTDA – EPP**, declara que:

A empresa **ALELI INFORMATICA LTDA – EPP**, inscrita no CNPJ **24.689.084/0001-80,** sediada R ROSA MAGNI MIRALHA, 59 Sl 102- São Paulo, SP, CEP 04152-010, e sua filial inscrita no **CNPJ 24.689.084/0002-61,** sediada na AV SETECENTOS S/N GALPAO17 MODULOS 13 E 14 SALA 20– Serra – ES, CEP 29161-414, é um **PARCEIRO AUTORIZADO HP, PARA COMPRA DIRETA DE PRODUTOS DA HP**, estando apto a comercializar as linhas de produtos HP de nossa fabricação descritas abaixo.

Produto:

8B9L3LS#AK4 – HP Z8 G4 Tower – garantia padrão do fabricante.

Declaramos ainda que, os produtos **8B9L3LS#AK4** – HP Z8 G4 Tower:

- A revenda Aleli Informática é uma revenda autorizada da HP
- Que o produto é novo, sem uso e sem previsão de descontinuidade até a data do processo.
- O licitante poderá abrir o equipamento e incluir memória, disco, placas etc. sem que perca a garantia do fabricante, desde que não cause mau uso. Os componentes posteriormente instalados não estão cobertos pela garantia dos equipamentos deste certame.
- A HP Disponibiliza "Central de atendimento telefônico" com número de telefone 0800 para abertura de chamado, em dias úteis, (segunda-feira a sexta-feira), em horário comercial (das 8h às18h) e "Central de atendimento via sistema web" para abertura de chamado 24x07, (domingo a domingo), a qualquer horário (das 00:00h às 23:59h);
- A HP Mantém os registros dos chamados que foram abertos, mantendo as informações que foram registradas sobre ele;
- A ferramenta Web de abertura de chamados da HP permite que o cliente a visualize e acompanhe os chamados abertos anteriormente;
- A assistência técnica "on-site" será realizada, durante todo o período de garantia dos equipamentos, pela própria HP ou por empresa de Assistência Técnica Autorizada da HP, a fim de que sejam mantidos válidos todos os direitos oriundos da garantia;
- Durante o prazo de garantia será substituída sem ônus para a contratante, a parte ou peça defeituosa, salvo quando o defeito for provocado por uso inadequado dos equipamentos;
- Certificado de Garantia é válido em todo o território nacional;
- A HP possui banco de dados disponibilizado na Internet que permita obter a configuração de hardware ofertado, periféricos internos

PSH

- Possui website para download e instalação de drivers mais atuais a partir do numero de serie, modelo ou atraves de auto descobrimento do equipamento - https://support.hp.com/br-pt/drivers/desktops
- A BIOS dos equipamentos ofertados neste processo é desenvolvida pela HP

Durante o período de garantia do Produto HP, a Fabricante HP responsabiliza-se pela garantia no prazo e condições padrão HP, conforme especificado no termo de garantia que acompanha o Produto HP e no manual técnico do Produto HP.

Serviços adicionais ao especificado na garantia padrão da Fabricante HP poderá ser adquiridos pelo Parceio HP, com prazos e condições customizados.

Declaramos que os equipamentos fabricados pela HP são novos, que não foram submetidos a uso, nem recondicionamento, ressalvados os testes de fábrica.

Os Produtos da marca HP são de fabricação própria ou homologados por regime de O&M e estão em linha de produção atual.

Declaramos, ainda, que a HP possui site na internet - www.hp.com.br – onde pode ser efetuado download de drivers para os Produtos HP e número de telefone para Grande São Paulo – (011) 4004-7751 e demais regiões – 0800 709 77 51 - para informações e aberturas de chamados técnicos.

A Rede de Serviços Autorizados HP está distribuída em todo território nacional, ou conforme indicado a seguir, com uso de peças e componentes originais e com técnicos devidamente treinados pela HP:

01.	**ACRE**
Nome:	UNISYS BRASIL LTDA
CPNJ:	33.426.420/0001-93
Endereço:	Rua Teixeira de Freitas, 31, Andar 10, Andar 12 - Centro
Cidade:	Rio de Janeiro - RJ - CEP: 20021-350
Contato:	
E-mail:	FESInnovationNFE@unisys.com
Telefone:	55 11 4680-6119

02.	**MARANHÃO**
Nome:	UNISYS BRASIL LTDA
CPNJ:	33.426.420/0001-93
Endereço:	Rua Teixeira de Freitas, 31, Andar 10, Andar 12 - Centro
Cidade:	Rio de Janeiro - RJ - CEP: 20021-350
Contato:	
E-mail:	FESInnovationNFE@unisys.com
Telefone:	55 11 4680-6119

PSH

03. **MATO GROSSO**

Nome: UNISYS BRASIL LTDA

CPNJ: 33.426.420/0001-93

Endereço: Rua Teixeira de Freitas, 31, Andar 10, Andar 12 - Centro

Cidade: Rio de Janeiro - RJ - CEP: 20021-350

Contato:

E-mail: advaraujo2009@hotmail.com

Telefone: 55 11 4680-6119

04. **MATO GROSSO DO SUL**

Nome: UNISYS BRASIL LTDA

CPNJ: 33.426.420/0001-93

Endereço: Rua Teixeira de Freitas, 31, Andar 10, Andar 12 - Centro

Cidade: Rio de Janeiro - RJ - CEP: 20021-350

Contato:

E-mail: FESInnovationNFE@unisys.com

Telefone: 55 11 4680-6119

05. **MINAS GERAIS**

Nome: PROCEDATA INFORMATICA LTDA. (Juiz de Fora)

CPNJ: 65.181.075/0004-04

Endereço: Avenida Brasil, 1438 – Sobreloja – Bairro Costa Carvalho

Cidade: Juiz de Fora, MG - CEP: 36070-060

Contato:

E-mail:

Telefone: (32) 3215-7632

Nome: PROCEDATA INFORMATICA LTDA. (Montes Claros)

CPNJ: 65.181.075/0005-95

Endereço: Avenida Dulce Sarmento, 140 sala 312

PSH

Cidade: Montes Claros, MG – CEP: 39400-318

Contato:

E-mail:

Telefone: (38) 3222-3995

Nome: PROCEDATA INFORMATICA LTDA. (Belo Horizonte)

CPNJ: 65.181.075/0001-61

Endereço: Avenida Nossa Senhora do Carmo, 45 - SALAS 501 à 504 -Carmo Sion

Cidade: Belo Horizonte, MG - CEP: 30310-000

Contato: Lúcio Guerra / Iara Martins

E-mail: lucioaxt@gmail.com

Telefone: (31) 3211-5900

Nome: UNISYS BRASIL LTDA

CPNJ: 33.426.420/0001-93

Endereço: Rua Teixeira de Freitas, 31, Andar 10, Andar 12 - Centro

Cidade: Rio de Janeiro - RJ - CEP: 20021-350

Contato:

E-mail: FESInnovationNFE@unisys.com

Telefone: 55 11 4680-6119

06. PARÁ

Nome: UNISYS BRASIL LTDA

CPNJ: 33.426.420/0001-93

Endereço: Rua Teixeira de Freitas, 31, Andar 10, Andar 12 - Centro

Cidade: Rio de Janeiro - RJ - CEP: 20021-350

Contato:

E-mail: FESInnovationNFE@unisys.com

Telefone: 55 11 4680-6119

07. PARAÍBA

Nome: UNISYS BRASIL LTDA

CPNJ: 33.426.420/0001-93

Endereço: Rua Teixeira de Freitas, 31, Andar 10, Andar 12 - Centro

Cidade: Rio de Janeiro - RJ - CEP: 20021-350

Contato:

PSH

0179

HP Brasil Indústria e Comércio de Equipamentos Eletrônicos Ltda.
Alameda Xingu, n.º 350, 8° andar
Alphaville Industrial, Barueri/SP
CEP: 06455-030
Brasil

declaração

Barueri, 05 de Outubro de 2023

Ao/À
CAMARA MUNICIPAL DE SOROCABA

Assunto:
EDITAL DE PREGÃO PRESENCIAL 25/2023

BDI 20742

A **HP BRASIL INDÚSTRIA E COMÉRCIO DE EQUIPAMENTOS ELETRÔNICOS LTDA. (HP)**, em atendimento ao quanto solicitado pelo Parceiro HP **ALELI INFORMATICA LTDA – EPP**, declara que:

A empresa **ALELI INFORMATICA LTDA – EPP**, inscrita no CNPJ **24.689.084/0001-80,** sediada R ROSA MAGNI MIRALHA, 59 Sl 102- São Paulo, SP, CEP 04152-010, e sua filial inscrita no **CNPJ 24.689.084/0002-61,** sediada na AV SETECENTOS S/N GALPAO17 MODULOS 13 E 14 SALA 20– Serra – ES, CEP 29161-414, é um **PARCEIRO AUTORIZADO HP, PARA COMPRA DIRETA DE PRODUTOS DA HP**, estando apto a comercializar as linhas de produtos HP de nossa fabricação descritas abaixo.

Produto:

8B9L3LS#AK4 – HP Z8 G4 Tower – garantia padrão do fabricante.

Declaramos ainda que, os produtos **8B9L3LS#AK4** – HP Z8 G4 Tower:

- A revenda Aleli Informática é uma revenda autorizada da HP
- Que o produto é novo, sem uso e sem previsão de descontinuidade até a data do processo.
- O licitante poderá abrir o equipamento e incluir memória, disco, placas etc. sem que perca a garantia do fabricante, desde que não cause mau uso. Os componentes posteriormente instalados não estão cobertos pela garantia dos equipamentos deste certame.
- A HP Disponibiliza "Central de atendimento telefônico" com número de telefone 0800 para abertura de chamado, em dias úteis, (segunda-feira a sexta-feira), em horário comercial (das 8h às18h) e "Central de atendimento via sistema web" para abertura de chamado 24x07, (domingo a domingo), a qualquer horário (das 00:00h às 23:59h);
- A HP Mantém os registros dos chamados que foram abertos, mantendo as informações que foram registradas sobre ele;
- A ferramenta Web de abertura de chamados da HP permite que o cliente a visualize e acompanhe os chamados abertos anteriormente;
- A assistência técnica "on-site" será realizada, durante todo o período de garantia dos equipamentos, pela própria HP ou por empresa de Assistência Técnica Autorizada da HP, a fim de que sejam mantidos válidos todos os direitos oriundos da garantia;
- Durante o prazo de garantia será substituída sem ônus para a contratante, a parte ou peça defeituosa, salvo quando o defeito for provocado por uso inadequado dos equipamentos;
- Certificado de Garantia é válido em todo o território nacional;
- A HP possui banco de dados disponibilizado na Internet que permita obter a configuração de hardware ofertado, periféricos internos

PSH

- Possui website para download e instalação de drivers mais atuais a partir do numero de serie, modelo ou atraves de auto descobrimento do equipamento - https://support.hp.com/br-pt/drivers/desktops
- A BIOS dos equipamentos ofertados neste processo é desenvolvida pela HP

Durante o período de garantia do Produto HP, a Fabricante HP responsabiliza-se pela garantia no prazo e condições padrão HP, conforme especificado no termo de garantia que acompanha o Produto HP e no manual técnico do Produto HP.

Serviços adicionais ao especificado na garantia padrão da Fabricante HP poderá ser adquiridos pelo Parceio HP, com prazos e condições customizados.

Declaramos que os equipamentos fabricados pela HP são novos, que não foram submetidos a uso, nem recondicionamento, ressalvados os testes de fábrica.

Os Produtos da marca HP são de fabricação própria ou homologados por regime de O&M e estão em linha de produção atual.

Declaramos, ainda, que a HP possui site na internet - www.hp.com.br – onde pode ser efetuado download de drivers para os Produtos HP e número de telefone para Grande São Paulo – (011) 4004-7751 e demais regiões – 0800 709 77 51 - para informações e aberturas de chamados técnicos.

A Rede de Serviços Autorizados HP está distribuída em todo território nacional, ou conforme indicado a seguir, com uso de peças e componentes originais e com técnicos devidamente treinados pela HP:

01.	**ACRE**
Nome:	UNISYS BRASIL LTDA
CPNJ:	33.426.420/0001-93
Endereço:	Rua Teixeira de Freitas, 31, Andar 10, Andar 12 - Centro
Cidade:	Rio de Janeiro - RJ - CEP: 20021-350
Contato:	
E-mail:	FESInnovationNFE@unisys.com
Telefone:	55 11 4680-6119

02.	**MARANHÃO**
Nome:	UNISYS BRASIL LTDA
CPNJ:	33.426.420/0001-93
Endereço:	Rua Teixeira de Freitas, 31, Andar 10, Andar 12 - Centro
Cidade:	Rio de Janeiro - RJ - CEP: 20021-350
Contato:	
E-mail:	FESInnovationNFE@unisys.com
Telefone:	55 11 4680-6119

PSH

03. **MATO GROSSO**

Nome: UNISYS BRASIL LTDA

CPNJ: 33.426.420/0001-93

Endereço: Rua Teixeira de Freitas, 31, Andar 10, Andar 12 - Centro

Cidade: Rio de Janeiro - RJ - CEP: 20021-350

Contato:

E-mail: advaraujo2009@hotmail.com

Telefone: 55 11 4680-6119

04. **MATO GROSSO DO SUL**

Nome: UNISYS BRASIL LTDA

CPNJ: 33.426.420/0001-93

Endereço: Rua Teixeira de Freitas, 31, Andar 10, Andar 12 - Centro

Cidade: Rio de Janeiro - RJ - CEP: 20021-350

Contato:

E-mail: FESInnovationNFE@unisys.com

Telefone: 55 11 4680-6119

05. **MINAS GERAIS**

Nome: PROCEDATA INFORMATICA LTDA. (Juiz de Fora)

CPNJ: 65.181.075/0004-04

Endereço: Avenida Brasil, 1438 – Sobreloja – Bairro Costa Carvalho

Cidade: Juiz de Fora, MG - CEP: 36070-060

Contato:

E-mail:

Telefone: (32) 3215-7632

Nome: PROCEDATA INFORMATICA LTDA. (Montes Claros)

CPNJ: 65.181.075/0005-95

Endereço: Avenida Dulce Sarmento, 140 sala 312

PSH

Cidade: Montes Claros, MG – CEP: 39400-318

Contato:

E-mail:

Telefone: (38) 3222-3995

Nome: PROCEDATA INFORMATICA LTDA. (Belo Horizonte)

CPNJ: 65.181.075/0001-61

Endereço: Avenida Nossa Senhora do Carmo, 45 - SALAS 501 à 504 -Carmo Sion

Cidade: Belo Horizonte, MG - CEP: 30310-000

Contato: Lúcio Guerra / Iara Martins

E-mail: lucioaxt@gmail.com

Telefone: (31) 3211-5900

Nome: UNISYS BRASIL LTDA

CPNJ: 33.426.420/0001-93

Endereço: Rua Teixeira de Freitas, 31, Andar 10, Andar 12 - Centro

Cidade: Rio de Janeiro - RJ - CEP: 20021-350

Contato:

E-mail: FESInnovationNFE@unisys.com

Telefone: 55 11 4680-6119

06. PARÁ

Nome: UNISYS BRASIL LTDA

CPNJ: 33.426.420/0001-93

Endereço: Rua Teixeira de Freitas, 31, Andar 10, Andar 12 - Centro

Cidade: Rio de Janeiro - RJ - CEP: 20021-350

Contato:

E-mail: FESInnovationNFE@unisys.com

Telefone: 55 11 4680-6119

07. PARAÍBA

Nome: UNISYS BRASIL LTDA

CPNJ: 33.426.420/0001-93

Endereço: Rua Teixeira de Freitas, 31, Andar 10, Andar 12 - Centro

Cidade: Rio de Janeiro - RJ - CEP: 20021-350

Contato:

PSH

0183

E-mail: FESInnovationNFE@unisys.com

Telefone: 55 11 4680-6119

08. PARANÁ

Nome: UNISYS BRASIL LTDA

CPNJ: 33.426.420/0001-93

Endereço: Rua Teixeira de Freitas, 31, Andar 10, Andar 12 - Centro

Cidade: Rio de Janeiro - RJ - CEP: 20021-350

Contato:

E-mail: FESInnovationNFE@unisys.com

Telefone: 55 11 4680-6119

09. ALAGOAS

Nome: UNISYS BRASIL LTDA

CPNJ: 33.426.420/0001-93

Endereço: Rua Teixeira de Freitas, 31, Andar 10, Andar 12 - Centro

Cidade: Rio de Janeiro - RJ - CEP: 20021-350

Contato:

E-mail: FESInnovationNFE@unisys.com

Telefone: 55 11 4680-6119

10. PERNAMBUCO

Nome: UNISYS BRASIL LTDA

CPNJ: 33.426.420/0001-93

Endereço: Rua Teixeira de Freitas, 31, Andar 10, Andar 12 - Centro

Cidade: Rio de Janeiro - RJ - CEP: 20021-350

Contato:

E-mail: FESInnovationNFE@unisys.com

Telefone: 55 11 4680-6119

11. PIAUÍ

Nome: UNISYS BRASIL LTDA

CPNJ: 33.426.420/0001-93

Endereço: Rua Teixeira de Freitas, 31, Andar 10, Andar 12 - Centro

PSH

Cidade: Rio de Janeiro - RJ - CEP: 20021-350

Contato:

E-mail: FESInnovationNFE@unisys.com

Telefone: 55 11 4680-6119

12. RIO DE JANEIRO

Nome: UNISYS BRASIL LTDA

CPNJ: 33.426.420/0001-93

Endereço: Rua Teixeira de Freitas, 31, Andar 10, Andar 12 - Centro

Cidade: Rio de Janeiro - RJ - CEP: 20021-350

Contato:

E-mail: FESInnovationNFE@unisys.com

Telefone: 55 11 4680-6119

13. RIO GRANDE DO NORTE

Nome: UNISYS BRASIL LTDA

CPNJ: 33.426.420/0001-93

Endereço: Rua Teixeira de Freitas, 31, Andar 10, Andar 12 - Centro

Cidade: Rio de Janeiro - RJ - CEP: 20021-350

Contato:

E-mail: FESInnovationNFE@unisys.com

Telefone: 55 11 4680-6119

14. RIO GRANDE DO SUL

Nome: UNISYS BRASIL LTDA

CPNJ: 33.426.420/0001-93

Endereço: Rua Teixeira de Freitas, 31, Andar 10, Andar 12 - Centro

Cidade: Rio de Janeiro - RJ - CEP: 20021-350

Contato:

E-mail: FESInnovationNFE@unisys.com

Telefone: 55 11 4680-6119

15. RONDÔNIA

Nome: UNISYS BRASIL LTDA

PSH

CPNJ: 33.426.420/0001-93

Endereço: Rua Teixeira de Freitas, 31, Andar 10, Andar 12 - Centro

Cidade: Rio de Janeiro - RJ - CEP: 20021-350

Contato:

E-mail:

Telefone: 55 11 4680-6119

16. RORAIMA

Nome: UNISYS BRASIL LTDA

CPNJ: 33.426.420/0001-93

Endereço: Rua Teixeira de Freitas, 31, Andar 10, Andar 12 - Centro

Cidade: Rio de Janeiro - RJ - CEP: 20021-350

Contato:

E-mail: FESInnovationNFE@unisys.com

Telefone: 55 11 4680-6119

17. SANTA CATARINA

Nome: UNISYS BRASIL LTDA

CPNJ: 33.426.420/0001-93

Endereço: Rua Teixeira de Freitas, 31, Andar 10, Andar 12 - Centro

Cidade: Rio de Janeiro - RJ - CEP: 20021-350

Contato:

E-mail: enio@obus.com.br

Telefone: 55 11 4680-6119

18. SÃO PAULO

Nome: ATS SOLUÇÕES EM INFORMÁTICA LTDA (Ribeirão Preto)

CPNJ: 07.882.993/0004-64

Endereço: RUA MARTIM AFONSO DE SOUZA, 51, VILA MARIA LUIZA

Cidade: Ribeirão Preto - SP - CEP: 14055-453

Contato:

E-mail:

Telefone: (16) 3441-6726

PSH

Nome: ATS SOLUÇÕES EM INFORMÁTICA LTDA (São José do Rio Preto)

CPNJ: 07.882.993/0002-00

Endereço: Rua XV de Novembro, 3057, Sala 1107 – Centro

Cidade: São José do Rio Preto – SP - CEP: 15015-907

Contato:

E-mail:

Telefone: (17) 3301-2935

19. AMAPÁ

Nome: UNISYS BRASIL LTDA

CPNJ: 33.426.420/0001-93

Endereço: Rua Teixeira de Freitas, 31, Andar 10, Andar 12 - Centro

Cidade: Rio de Janeiro - RJ - CEP: 20021-350

Contato:

E-mail: FESInnovationNFE@unisys.com

Telefone: 55 11 4680-6119

20. SÃO PAULO

Nome: ATS SOLUÇÕES EM INFORMÁTICA LTDA (Santo André > São Bernardo do Campo)

CPNJ: 07.882.993/0009-79

Endereço: Avenida Getúlio Vargas, 1838, Baeta Neves

Cidade: São Bernardo do Campo - SP - CEP: 09751-251

Contato:

E-mail:

Telefone:

Nome: ATS SOLUÇÕES EM INFORMÁTICA LTDA (Campinas)

CPNJ: 07.882.993/0007-07

Endereço: Rua Doutor Las Casas dos Santos, 113 – sala 02 - Vl. São Bernardo

Cidade: Campinas, SP– CEP 13030490

Contato:

E-mail:

Telefone: (19) 3272-2280 / 3958-7402

PSH

Nome:	ATS SOLUÇÕES EM INFORMÁTICA LTDA (Bauru)
CPNJ:	07.882.993/0006-26
Endereço:	Rua 1º de Agosto, 4-47, Sala 501 – Centro Bairro: Centro
Cidade:	Bauru – SP - CEP: 17010-011
Contato:	
E-mail:	
Telefone:	(14) 3222-6289

21. SERGIPE

Nome:	UNISYS BRASIL LTDA
CPNJ:	33.426.420/0001-93
Endereço:	Rua Teixeira de Freitas, 31, Andar 10, Andar 12 - Centro
Cidade:	Rio de Janeiro - RJ - CEP: 20021-350
Contato:	
E-mail:	FESInnovationNFE@unisys.com
Telefone:	55 11 4680-6119

22. TOCANTINS

Nome:	UNISYS BRASIL LTDA
CPNJ:	33.426.420/0001-93
Endereço:	Rua Teixeira de Freitas, 31, Andar 10, Andar 12 - Centro
Cidade:	Rio de Janeiro - RJ - CEP: 20021-350
Contato:	
E-mail:	FESInnovationNFE@unisys.com
Telefone:	55 11 4680-6119

23. AMAZONAS

Nome:	UNISYS BRASIL LTDA
CPNJ:	33.426.420/0001-93
Endereço:	Rua Teixeira de Freitas, 31, Andar 10, Andar 12 - Centro
Cidade:	Rio de Janeiro - RJ - CEP: 20021-350
Contato:	
E-mail:	FESInnovationNFE@unisys.com
Telefone:	55 11 4680-6119

0188

24.	**BAHIA**
Nome:	UNISYS BRASIL LTDA
CPNJ:	33.426.420/0001-93
Endereço:	Rua Teixeira de Freitas, 31, Andar 10, Andar 12 - Centro
Cidade:	Rio de Janeiro - RJ - CEP: 20021-350
Contato:	
E-mail:	FESInnovationNFE@unisys.com
Telefone:	55 11 4680-6119

25.	**CEARÁ**
Nome:	UNISYS BRASIL LTDA
CPNJ:	33.426.420/0001-93
Endereço:	Rua Teixeira de Freitas, 31, Andar 10, Andar 12 - Centro
Cidade:	Rio de Janeiro - RJ - CEP: 20021-350
Contato:	
E-mail:	FESInnovationNFE@unisys.com
Telefone:	55 11 4680-6119

26.	**BRASÍLIA - DF**
Nome:	UNISYS BRASIL LTDA
CPNJ:	33.426.420/0024-80
Endereço:	Q SAAN QD 03, Lote 1250/60 s/n
Cidade:	Brasília, Distrito Federal, CEP: 70632-320
Contato:	
E-mail:	FESInnovationNFE@unisys.com
Telefone:	55 (61) 3202-6666

27.	**ESPÍRITO SANTO**
Nome:	UNISYS BRASIL LTDA
CPNJ:	33.426.420/0001-93
Endereço:	Rua Teixeira de Freitas, 31, Andar 10, Andar 12 - Centro
Cidade:	Rio de Janeiro - RJ - CEP: 20021-350
Contato:	

PSH

HP Z8 G5 Workstation Desktop PC

Take on processor-intensive workloads. Relentlessly

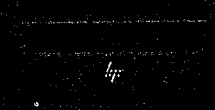

Processor-intensive workflows have met their match. The Z8 G5 offers more CPU performance than ever before, in a classic dual socket design, to accelerate rendering with real-time ray tracing, data visualization, and model training while also providing plenty of room to expand as demands change.

Remarkable performance. Whisper-quiet acoustics

Tackle processor-intensive workflows with up to 64 cores[1] across 2 Intel® Xeon® CPUs, 2 high-end GPUs, and 1 TB DDR5 RAM[2]—all while running whisper quiet. With a class-leading acoustic design, push your system to the max without disruptive noise.

Upgrade. Expand. Evolve

Need to upgrade your device? Go for it. Easily expand and add components as your work evolves with room for up to 2 high-end graphics cards, 1 TB memory, 120 TB storage, 2 front accessible NVMe bays, 7 PCIe slots (up to Gen 5), and tool-less access.[3]

Comprehensive security. Reliability you can trust

Get peace of mind with a PC that's built to endure. The Z8 undergoes 360K hours of rigorous testing, military-standard testing[4] and is certified for pro apps. And with HP Wolf Security for Business[5], it's protected below, in and above the OS.

Maximize your IT lifecycle

Designed for simpler IT management, the Z8 is built for longevity with a 3 year lifecycle—longer than typical business PCs. Plan for the future and avoid re-qualifying devices every year, saving you serious time and money.[2,6]

HP Z8 G5 Workstation Desktop PC

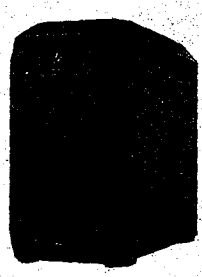
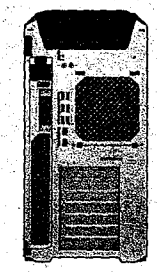


Operating Systems
Support your unique user needs with a choice of Windows 11 Pro, WSL2 or Linux® operating systems.[6]

Intel® Xeon® Processors
Power demanding professional workloads with more CPU performance than ever before—up to 64 cores[7] with 2 next-gen Intel® Xeon® CPUs—and professional grade security[8] and reliability[9].

Professional Grade Graphics
Tackle processor-heavy rendering, machine learning, and data visualization projects with up to 2 NVIDIA RTX™ 6000 Ada Generation GPUs or 2 AMD Radeon™ Pro W6800 GPUs.[10]

Ultra Fast Memory Configurations
Power through memory-intensive workloads with up to 1 TB DDR5 memory[11] for fast CPU-dependent rendering, model training and development, and data visualization performance.

Storage
Get up to 120TB of storage across a variety of devices, including new front-accessible, hot-swappable NVMe devices with status information via external LED and email notifications.[3]

Word Class Design & Acoustics
Keep quiet, cool and focused even at peak performance. Smart fan control keeps the system whisper-quiet by tuning fan speeds in real-time using over 20 temperature sensors.

Fast Data Transfer and Network Connectivity
Thunderbolt™ 4 technology[12] for fast data transfers, and two ports of lightning-quick 10 GbE network connection at a lower cost than standard PCIe add-in cards.

HP Anyware
Access the power of your Z from any device with HP Anyware[13]—remote access software delivering fast responsiveness and image quality, even in film editing and data visualizations.

Smart Support with HP TechPulse
Get enhanced support and reduce downtime. HP Smart Support provides support agents, secure access to device health insights, and configuration data for faster troubleshooting.

Z by HP Data Science Stack Manager
Z by HP Data Science Stack Manager provides easy access to popular data science tools and updates them automatically, to help you customize your environment on Windows or Ubuntu.[15]

ISV Certified
Work with confidence knowing your desktop is certified with leading software applications to ensure peak performance even with complex projects.

HP Wolf Security for Business
Get a hardware-enforced, always-on defense. From the BIOS to the browser - above, in, and below the OS - these constantly evolving solutions help protect from modern threats.[5]

HP Z8 G5 Workstation Desktop PC

Specifications Table

Available Operating Systems	Windows 11 Pro for Workstations[2,3] Ubuntu 22.04 LTS Linux® Ready[5] Red Hat® Enterprise Linux®[5]
Processor family	Intel® Xeon® Scalable processor
Available Processors[6,7,30]	Intel® Xeon® Gold 6448Y (2.1 GHz base frequency, up to 4.1 GHz with Intel® Turbo Boost Technology, 60 MB L3 cache, 32 cores, 64 threads) Intel® Xeon® Gold 6444Y (3.6 GHz base frequency, up to 4.1 GHz with Intel® Turbo Boost Technology, 45 MB L3 cache, 16 cores, 32 threads) Intel® Xeon® Gold 6442Y (2.6 GHz base frequency, up to 4.0 GHz with Intel® Turbo Boost Technology, 60 MB L3 cache, 24 cores, 48 threads) Intel® Xeon® Gold 6438Y+ (2.0 GHz base frequency, up to 4.0 GHz with Intel® Turbo Boost Technology, 60 MB L3 cache, 32 cores, 64 threads) Intel® Xeon® Gold 6434 (3.7 GHz base frequency, up to 4.1 GHz with Intel® Turbo Boost Technology, 22.5 MB L3 cache, 8 cores, 16 threads) Intel® Xeon® Gold 6430 (2.1 GHz base frequency, up to 3.4 GHz with Intel® Turbo Boost Technology, 60 MB L3 cache, 32 cores, 64 threads) Intel® Xeon® Gold 6426Y (2.5 GHz base frequency, up to 4.1 GHz with Intel® Turbo Boost Technology, 37.5 MB L3 cache, 16 cores, 32 threads) Intel® Xeon® Gold 5420+ (2.0 GHz base frequency, up to 4.1 GHz with Intel® Turbo Boost Technology, 52.5 MB L3 cache, 28 cores, 56 threads) Intel® Xeon® Gold 5418Y (2.0 GHz base frequency, up to 3.8 GHz with Intel® Turbo Boost Technology, 45 MB L3 cache, 24 cores, 48 threads) Intel® Xeon® Gold 5416S (2.1 GHz base frequency, up to 4.1 GHz with Intel® Turbo Boost Technology, 30 MB L3 cache, 16 cores, 32 threads) Intel® Xeon® Gold 5415+ (2.9 GHz base frequency, up to 4.1 GHz with Intel® Turbo Boost Technology, 22.5 MB L3 cache, 8 cores, 16 threads) Intel® Xeon® Silver 4416+ (2.0 GHz base frequency, up to 3.9 GHz with Intel® Turbo Boost Technology, 37.5 MB L3 cache, 20 cores, 40 threads) Intel® Xeon® Silver 4410Y (2.0 GHz base frequency, up to 3.9 GHz with Intel® Turbo Boost Technology, 30 MB L3 cache, 12 cores, 24 threads)
Chipset	Intel® C741
Form factor	Tower
Maximum memory	1 TB DDR5-4800 ECC SDRAM [11] Transfer rates up to 4800 MT/s.
Memory slots	16 DIMM (with dual processors)
Internal storage	1 TB up to 12 TB 7200 rpm SATA Enterprise HDD[8,40] 512 GB up to 2 TB HP Z Turbo Drive NVMe™ M.2 SSD[8] 512 GB up to 4 TB HP Z Turbo Drive PCIe® SSD M.2[8] 512 GB up to 4 TB HP Z Turbo Drive PCIe® SED Opal 2 M.2 SSD[8] 512 GB up to 4 TB HP Z Turbo Drive Dual Pro PCIe® SSD[8] 512 GB up to 4 TB HP Z Turbo Drive PCIe® SSD[5,41]
Optical drive	HP Slim DVD-ROM; HP Slim Blu-ray Writer; HP Slim DVD-Writer [9,10]
Available Graphics	Ultra High-End: NVIDIA RTX™ A6000 (48 GB GDDR6 dedicated) NVIDIA RTX™ A5000 (24 GB GDDR6 dedicated) AMD Radeon™ Pro W6800 (32 GB GDDR6 dedicated) NVIDIA RTX™ 6000 Ada Generation (48 GB GDDR6 dedicated)[29] High-End: NVIDIA RTX™ A4500 (20 GB GDDR6 dedicated) NVIDIA RTX™ A4000 (16 GB GDDR6 dedicated) NVIDIA® A4000E (16 GB GDDR6 dedicated) NVIDIA RTX™ A2000 (12 GB GDDR6 dedicated) NVIDIA RTX™ A2000E (12 GB GDDR6 dedicated)[29] Mid-Range: NVIDIA® T1000 (8 GB GDDR6 dedicated) NVIDIA® T1000E (8 GB GDDR6 dedicated) AMD Radeon™ Pro W6600 (8 GB GDDR6 dedicated) Intel® Arc™ Pro A40 (6 GB GDDR6 dedicated)[29] Entry: NVIDIA® T1000 (4 GB GDDR6 dedicated) NVIDIA® T400 (4 GB GDDR6 dedicated) AMD Radeon™ RX 6400 (4 GB GDDR6 dedicated)[39]
Audio	Realtek ALC3205-CG
Expansion slots	1 PCIe 3 x16; 1 PCIe 3 x8; 2 PCIe 3 x4; 1 PCIe 5 x16; 2 PCIe 4 x16; 2 PCIe 4 x8 (Rear bulkhead access can be achieved through all slots but 2 PCIe 4 x8 are internal access only for M.2 (1 PCIe 4 x16 available when 2nd CPU is not installed; 1 PCIe 3 x16 available only when 2nd CPU is installed).)
Memory card device	1 SD card reader (optional)
Ports and connectors	Front: 4 SuperSpeed USB Type-A 5Gbps signaling rate; 1 headphone/microphone combo[31] ; Rear: 6 SuperSpeed USB Type-A 5Gbps signaling rate; 1 audio-in/out; 2 RJ-45 (1 GbE AMT, 1GbE, optional 10GbE) ; Optional Ports: 2 Thunderbolt™ 4 with USB Type-C® 40Gbps signaling rate (USB Power Delivery, DisplayPort™ 1.4)

HP Z8 G5 Workstation Desktop PC

Specifications Table

Keyboard	HP USB Business Slim SmartCard CCID Keyboard; HP USB 320K Keyboard; HP 125 Black Wired Keyboard[13]
Mouse	HP wired desktop 128 laser mouse; HP Wired 320M Mouse[13]
Communications	LAN:Intel® Ethernet Network Adapter I225-T1; Integrated Intel® I219-LM PCIe® GbE, vPro®; Integrated Intel® I210-AT PCIe® GbE, non-vPro®; HP dual-port 10GBase-T NIC; Intel® X550-T2 dual-port GbE NIC; Intel® X550-T2 dual-port 10GbE NIC; NVIDIA® Mellanox ConnectX-6 DX Dual Port 10/25GbE SFP28 NIC; Allied Telesis AT-2911T/2-901 dual-port 1GbE NIC; Allied Telesis AT-2914SX/LC PCIe Fiber NIC; HP 10 GbE SFP+ SR LC Fiber transceiver; HP 25 GbE SFP28 LC Fiber transceiver[39]; WLAN:Intel® Wi-Fi 6E AX210 (2x2) and Bluetooth® 5.3 wireless card, non-vPro® with external antenna[12,32];
Drive Bays	External: Two 9.5 mm ODD; Internal: Six PCIe® M.2 SSD; Six 3.5" HDD
Software[17,18,19,37]	HP PC Hardware Diagnostics UEFI HP Performance Advisor HP Support Assistant HP PC Hardware Diagnostics Windows HP Image Assistant HP Manageability Integration Kit HP Anyware HP Services Scan HP Data Science Stack Manager
Security management [20,21,22,23,24,25,26,27]	Full volume encryption HP Secure Erase Kensington lock slot Secure authentication TPM 2.0 certified HP BIOSphere HP Sure Run HP Sure Click HP Sure Sense HP Sure Admin HP Platform Certificate HP Sure Start HP Sure Recover Self-Encrypted Drives
Security Software Licenses	HP Wolf Pro Security Edition[28]
Management features	HP Driver Packs; HP System Software Manager (download); HP BIOS Configuration Utility (download); HP Smart Support
Power	1700 W internal power supply, up to 90% efficiency, active PFC; 1450 W internal power supply, up to 90% efficiency, active PFC; 1125 W internal power supply, up to 90% efficiency, active PFC1700 W internal power supply, up to 90% efficiency, active PFC; 1450 W internal power supply, up to 90% efficiency, active PFC; 1125 W internal power supply, up to 90% efficiency, active PFC
Dimensions	21.59 x 55.12 x 44.45 cm; 33.2 x 73.4 x 63.6 cm (Package)
Weight	Starting at 22.5 kg; (Exact weights depend upon configuration (System weight only))
Ecolabels	EPEAT® registered configurations available; TCO Certified configurations available[14,15]
Energy star certified	ENERGY STAR® certified (configurations available)
Sustainable impact specifications	Low Halogen; 40% post-consumer recycled plastic; 25% ITE-derived closed loop plastic; Bulk packaging available; External power supply 90% efficiency; Plastic cushion inserts contain 80% recycled content; Ocean-bound plastic in system fan; 10% post-industrial recycled metal; Molded paper pulp cushion inside box is 100% sustainably sourced and recyclable[16,33,34,35,36]
Compatible displays	All HP Z Displays and HP DreamColor Displays are supported. For more information see http://www.hp.com/go/zdisplays

HP Z8 G5 Workstation Desktop PC

Messaging Footnotes

[1] 64 cores is enabled through installation of two CPUs. Multicore is designed to improve performance of certain software products. Not all customers or software applications will necessarily benefit from use of this technology. Performance and clock frequency will vary depending on application workload and your hardware and software configurations. Intel's numbering, branding and/or naming is not a measurement of higher performance.
[2] Optional, configurable features.
[3] Optional, configurable features. Configurations for 120TB storage and for front accessible NVME bays are planned to be available in the first half of 2023. NVMe bay email notifications are planned to be available in the second half of 2023. Configuration for 120TB requires separate additional purchase. For storage drives, GB = 1 billion bytes. TB = 1 trillion bytes. Actual formatted capacity is less. Up to 35GB is reserved for system recovery software.
[4] Testing is not intended to demonstrate fitness of U.S. Department of Defense (DoD) contract requirements or for military use. Test results are not a guarantee of future performance under these test conditions. Accidental damage requires an optional HP Accidental Damage Protection Care Pack.
[5] HP Wolf Security for Business requires Windows 10 or 11 Pro or higher, includes various HP security features and is available on HP Pro, Elite and Workstation products. See product details for included security features and OS requirement.
[6] Not all features are available in all editions or versions of Windows. Systems may require upgraded and/or separately purchased hardware, drivers, software or BIOS update to take full advantage of Windows functionality. Windows is automatically updated and enabled. High speed internet and Microsoft account required. ISP fees may apply and additional requirements may apply over time for updates. See http://www.windows.com .
[7] 64 cores is enabled through installation of two CPUs. Multicore is designed to improve performance of certain software products. Not all customers or software applications will necessarily benefit from use of this technology. Performance and clock frequency will vary depending on application workload and your hardware and software configurations. Intel's numbering, branding and/or naming is not a measurement of higher performance.
[8] Professional grade security is enabled with Intel vPro®2 Enterprise technologies. Intel vPro® Enterprise technologies are available only on Intel® Xeon® W-3400 and Intel® Xeon® W-2400 processors. Intel vPro® requires Windows 10 Pro 64 bit or higher, a vPro supported processor, vPro enabled chipset, vPro enabled wired LAN and/or Wi-Fi 6E WLAN and TPM 2.0. Some functionality requires additional 3rd party software in order to run. Features of vPro® Essentials and Enterprise vary. See http://intel.com/vpro .
[9] Error Correction Code (ECC) Memory enables enhanced data reliability. ECC memory is only available on Intel® Xeon® processor options.
[10] Graphics are sold separately or as an optional feature.
[11] Up to 1 TB DDR5 memory is an optional, configureable feature.
[12] Thunderbolt™ 4 technology and two ports of 10 GbE network connection are planned to be available in the second half of 2023.
[13] USB Speed USB 20Gbps is not available with Thunderbolt™ 4.
[14] Network access required. HP Anyware software and licensing are available through a 1- or 3-year subscription. Renewal is required after the subscription term. HP Anyware subscriptions are based on the number of concurrent PCoIP connections used (pay for the number of host connections, not the software) with a minimum order quantity of 5. For a limited time, an HP Anyware Professional subscription also includes access and support for ZCentral Remote Boost and ZCentral Connect and is available for purchase through an HP reseller or contact sales at hp.com/Anyware. ZCentral Remote Boost Sender requires Windows 10 and 11, RHEL/CentOS (7 or 8), or UBUNTU 18.04 or 20.04 LTS operating systems. macOS (10.14 or newer) operating system and ThinPro 7.2 are only supported on the receiver side. ZCentral Connect requires Windows (10 or 11) or Windows Server (2016 or 2019) operating system, Microsoft Active Directory and Intel Active Management Technology for select features. For system requirements and to install HP Anyware and Anyware Manager, refer to the Admin Guides at: https://docs.teradici.com/find/product/hp-anyware .
[14] HP Smart Support automatically collects the telemetry necessary upon initial boot of the product to deliver device-level configuration data and health insights and is available preinstalled on select products, or it can be downloaded. For more information about how to enable HP Smart Support or to download, please visit http://www.hp.com/smart-support .

Technical Specifications Footnotes

[1] Not all features are available in all editions or versions of Windows. Systems may require upgraded and/or separately purchased hardware, drivers, software or BIOS update to take full advantage of Windows functionality. Windows is automatically updated and enabled. High speed internet and Microsoft account required. ISP fees may apply and additional requirements may apply over time for updates. See http://www.windows.com .
[2] Windows 11 Pro for Workstations can be preinstalled. You may only use one version of the Windows software at a time. Switching between versions will require you to uninstall one version and install the other version. You must back up all data (files, photos, etc.) before uninstalling and installing operating systems to avoid loss of your data.
[3] Note: Windows 7 and Windows 8 operating systems are not supported on this product. No Windows 7 or Windows 8 drivers will be provided on http://www.support.hp.com .
[5] Note: For detailed Linux® OS/hardware support information, see: http://www.hp.com/support/linux_hardware_matrix .
[6] Multicore is designed to improve performance of certain software products. Not all customers or software applications will necessarily benefit from use of this technology. Performance and clock frequency will vary depending on application workload and your hardware and software configurations. Intel's numbering, branding and/or naming is not a measurement of higher performance.
[7] Intel vPro® requires Windows 10 Pro 64 bit or higher, a vPro supported processor, vPro enabled chipset, vPro enabled wired LAN and/or Wi-Fi 6E WLAN and TPM 2.0. Some functionality requires additional 3rd party software in order to run. Features of vPro® Essentials and Enterprise vary. See http://intel.com/vpro .
[8] For storage drives, GB = 1 billion bytes. TB = 1 trillion bytes. Actual formatted capacity is less. Up to 35GB (for Windows) is reserved for system recovery software.
[9] Duplication of copyrighted material is strictly prohibited. Actual speeds may vary. Double Layer media compatibility will widely vary with some home DVD players and DVD-ROM drives. No support for DVD RAM.
[10] With Blu-Ray, certain disc, digital connection, compatibility and/or performance issues may arise, and do not constitute defects in the product. Flawless playback on all systems is not guaranteed. In order for some Blu-ray titles to play, they may require a DVI or HDMI digital connection and your display may require HDCP support. HD-DVD movies cannot be played on this Desktop PC.
[11] The 2TB memory configuration requires 128GB DIMMs which is planned to be available in the first half of 2023.
[12] Wireless access point and Internet service required and sold separately. Availability of public wireless access points limited. Wi-Fi 6 (802.11ax) is backwards compatible with prior 802.11 specs.
[13] Optional or add-on feature.
[14] Based on US EPEAT® registration according to IEEE 1680.1-2018 EPEAT®. Status varies by country. Visit www.epeat.net for more information.
[15] TCO Certified configurations available when ENERGY STAR configurations are selected with a USB Type-C® connector. ENERGY STAR available with a combination of high-performance CPU's, high-performance GPU's and select memory configurations.
[16] External power supplies, power cords, cables and peripherals are not low halogen. Service parts obtained after purchase may not be low halogen.
[17] HP Performance Advisor Software - HP Performance Advisor is ready and waiting to help you get the most out of your HP Workstation from day one—and every day after. Learn more or download at: https://www8.hp.com/us/en/workstations/performance-advisor.html .
[18] HP Support Assistant requires Windows and Internet access.
[19] HP Manageability Integration Kit can be downloaded from http://www8.hp.com/us/en/ads/clientmanagement/overview.html .
[20] HP Sure Click requires Windows 11 Pro or Enterprise. See https://bit.ly/2PrLT6A_SureClick for complete details.
[21] HP Sure Start Gen7 is available on select HP PCs and Workstations. See product specifications for availability.
[22] HP Sure Recover Gen4 is available on select HP PCs and requires an open network connection. You must back up important files, data, photos, videos, etc. before using HP Sure Recover to avoid loss of data.
[23] HP Sure Sense requires Windows 11 Pro or Enterprise and supports Microsoft Internet Explorer, Google Chrome™, and Chromium™. Supported attachments include Microsoft Office (Word, Excel, PowerPoint) and PDF files in read only mode, when Microsoft Office or Adobe Acrobat are installed.
[24] HP Sure Run Gen5 is available on select HP PCs and requires Windows 10 and higher.
[25] HP Sure Admin requires Windows 10 or higher, HP BIOS, HP Manageability Integration Kit from http://www.hp.com/go/clientmanagement and HP Sure Admin Local Access Authenticator smartphone app from the Android or Apple store.
[26] HP Secure Erase for the methods outlined in the National Institute of Standards and Technology Special Publication 800-88.
[27] HP BIOSphere Gen6 features may vary depending on the platform and configurations.
[28] HP Wolf Pro Security Edition (including HP Sure Click Pro and HP Sure Sense Pro) is available preloaded on select SKUs and, depending on the HP product purchased, includes a paid 1-year or 3-year license. The HP Wolf Pro Security Edition software is licensed under the license terms of the HP Wolf Security Software - End-User license Agreement (EULA) that can be found at: https://support.hp.com/us-en/document/ish_3875769-3873014-16 as that EULA is modified by the following: "7. Term. Unless otherwise terminated earlier pursuant to the terms contained in this EULA, the license for the HP Wolf Pro Security Edition (HP Sure Sense Pro and HP Sure Click Pro) is effective upon activation and will continue for either a twelve (12) month or thirty-six (36) month license term ("Initial Term"). At the end of the Initial Term you may either (a) purchase a renewal license for the HP Wolf Pro Security Edition from HP.com, HP Sales or an HP Channel Partner, or (b) continue using the standard versions of HP Sure Click and HP Sure Sense at no additional cost with no future software updates or HP Support.
[29] NVIDIA graphics cards denoting a letter "E" refer to long-life variants of the card.
[30] Y = Supports Intel Speed Select Technology - Performance Profile 2.0 (Intel SST-PP) + = Feature plus SKUs denote support of built-in accelerators (QuickAssist, Dynamic Load Balancer, In-memory Analytics Accelerator) for workload optimized acceleration.
[31] Front I/O offers Battery Charging 1.2 through one of the USB Type-A ports.
[32] Wi-Fi 6E requires a Wi-Fi 6E router, sold separately, to function in the 6GHz band. Availability of public wireless access points limited. Wi-Fi 6E is backwards compatible with prior 802.11 specs. And available in countries where Wi-Fi 6E is supported.
[33] Percentage of ocean-bound plastic contained in each component varies by product.
[34] Recycled plastic content percentage is based on the definition set in the IEEE 1680.1-2018 standard.
[35] 100% outer box packaging and corrugated cushions made from sustainably sourced certified and recycled fibers.
[36] Fiber cushions made from 100% recycled wood fiber and organic materials.
[37] HP Services Scan is provided with Windows Update on select products and will check entitlement on each hardware device to determine if an HP TechPulse-enabled service has been purchased, and will download applicable software automatically. HP TechPulse is a telemetry and analytics platform that provides critical data around devices and applications. For full system requirements or to disable this feature, please visit http://www.hpdaas.com/requirements . Not applicable in China.
[39] The NVIDIA® Mellanox ConnectX-6 DX Dual Port 10/25GbE SFP28 NIC requires a transceiver in order to connect to a network. Transceivers sold separately.
[40] Starting November 1, 2023, HP PCs with Windows require Windows to be installed on SSD. HDD can only be configured as additional data drives and not as the boot drive.
[41] Available late 2023.

Sign up for updates **hp.com/go/getupdated**

October 2023

Overview

HP Z8 G5 Workstation Desktop PC

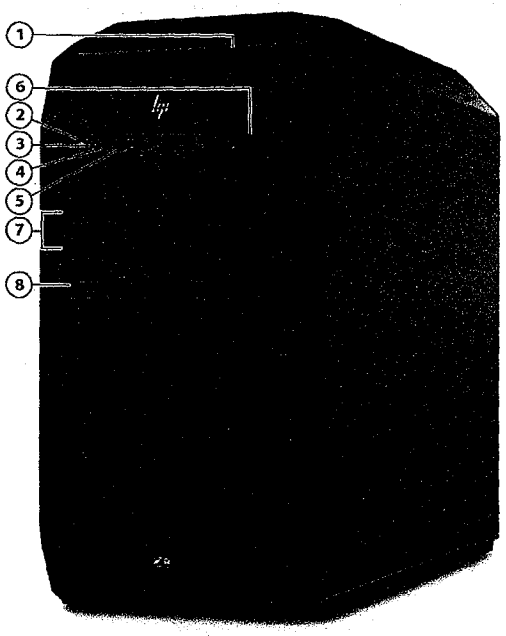

Front View

1. Integrated Front Handle
2. Power Button
3. HDD Activity LED
4. Headphone/microphone combo
5. Front I/O:
   4 SuperSpeed USB Type-A 5 Gbps signaling rate [left-most Type-A ports supports BC1.2 (Battery Charging)]
6. SD Card Reader
7. 2x External 5.25" bay[1]
8. 9.5mm Optical Drive Bay

[1]Only 1 external 5.25" drive configurable from factory

Overview

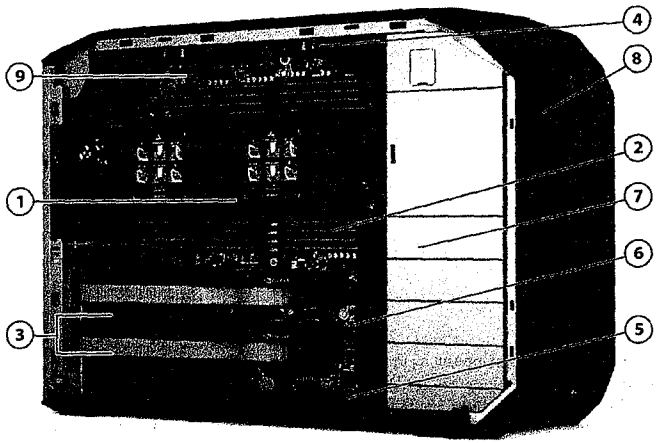

Internal View

1. 2 Intel® Xeon® Processors (Sapphire Rapids-Scalable)
2. 16 DIMM slots for DDR5 ECC Memory – 8 DIMMs per installed processor
3. •Slot 1: PCIe x16 Gen4
   •Slot 2: PCIe x16 Gen4 - Available ONLY when 2nd processor is installed
   •Slot 3: PCIe x4 Gen3
   •Slot 4: PCIe x16 Gen5
   •Slot 5: PCIe x8 Gen3
   •Slot 6: PCIe x16 Gen3 - Available ONLY when 2nd processor is installed
   •Slot 7: PCIe x4 Gen3
4. 2 PCIe x8 Gen4 configurable with 4 Z Turbo M.2 SSDs (2nd slot available ONLY when 2nd processor is installed)
5. 6 SATA ports
6. 3 Internal USB Ports
   (1 single USB2.0 port, 1 dual USB2.0 port, 1 USB3.0 port (for the SD card reader))
7. 4 Internal 3.5" bays
8. 2 External 5.25" bays and Slimline Optical Drive
9. 1 Internal NVMe connector to front removable M.2 carrier

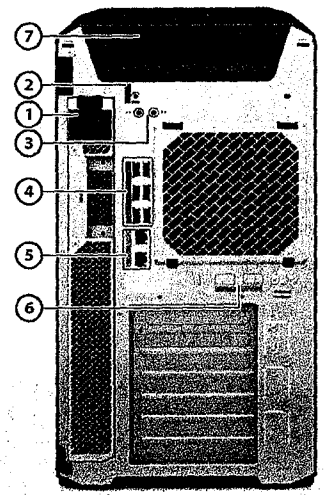

Rear View

1. Choice of 90% Efficient Power Supplies:
   - 1125W @110V or 1450W @200V
   - 1450W @110V or 1700W @200V
2. Rear Power Button
3. Audio in/out
4. 6 SuperSpeed USB Type-A 5 Gbps signaling rate
5. 2 RJ-45 integrated LAN ports (1 GbE AMT, 1GbE)
6. 2 10GbE LAN ports (optional)
7. Integrated Rear Handle

Form Factor Tower

Operating Systems

Preinstalled:
- Windows 11 Pro for Workstations[2]
- Windows 11 Pro for Workstations (preinstalled with Windows 10 Pro for Workstations Downgrade)[2,3]
- Ubuntu 22.04 LTS[4]
- HP Linux®-ready (minimal OS ready for customer OS installation)[5]

License Only:
- Red Hat® Enterprise Linux® Desktop Workstation (includes paper license with 1 year support; no preinstalled OS)[6]

Supported:
- Windows 11, version 22H2, 21H2[2]
- Windows 10, version 22H2, 21H2[2]

- Red Hat® Enterprise Linux® Workstation 8 & 9[6]
- SUSE Linux® Enterprise Desktop 15[6]
- Ubuntu 20.04 & 22.04 LTS[5]

Web-supported only:
- Windows 11 Enterprise[2,1]
- Windows 10 Enterprise[2,1]

[1] Windows Enterprise sold separately and requires that customer have an enterprise license from Microsoft.
[2] Not all features are available in all editions or versions of Windows. Systems may require upgraded and/or separately purchased hardware, drivers, software or BIOS update to take full advantage of Windows functionality. Windows is automatically updated and enabled. High speed internet and Microsoft account required. ISP fees may apply and additional requirements may apply over time for updates. See http://www.windows.com.
[3]This system is preinstalled with Windows 10 Pro software and also comes with a license for Windows 11 Pro software and provision for recovery software. You may only use one version of the Windows software at a time. Switching between versions will require you to uninstall one version and install the other version. You must back up all data (files, photos, etc.) before uninstalling and installing operating systems to avoid loss of your data.
[4] Not all features are available in all editions or versions of Ubuntu. Systems may require upgraded and/or separately purchased hardware, drivers, software or BIOS to take full advantage of Ubuntu functionality. Ubuntu may be automatically updated. ISP fees may apply and additional requirements may apply over time for updates.
[5]A certified preloaded version of Ubuntu® 20.04 LTS is available from HP for this platform. Not all features are available in all editions or versions of Ubuntu. Systems may require upgraded and/or separately purchased hardware, drivers, software or BIOS to take full advantage of Ubuntu functionality. Ubuntu may be automatically updated. ISP fees may apply, and additional requirements may apply over time for upgrades.
[6]For detailed Linux® OS/hardware support information, see:
http://www.hp.com/support/linux_hardware_matrix

NOTE: Your product does not support Windows 8 or Windows 7. In accordance with Microsoft's support policy, HP does not support the Windows® 8 or Windows 7 operating system on products configured with Intel® and AMD® 7th generation and forward processors or provide any Windows® 8 or Windows 7 drivers on http://www.support.hp.com. A full list of HP products and the Windows 10 versions tested is available on the HP support website. https://support.hp.com/us-en/document/c05195282

Overview

Processors

Name	Cores	Threads	Frequency (GHz)		Cache (MB)	Max Memory Speed (MT/s)	TDP (W)
			Base Clock Speed	Max Turbo Frequency[2]		1 DIMM per Channel	
Intel® Xeon® Gold 6448Y	32	64	2.1	4.1	60	4800	225
Intel® Xeon® Gold 6438Y+	32	64	2.0	4.0	60	4800	205
Intel® Xeon® Gold 6430	32	64	2.1	3.4	60	4400	270
Intel® Xeon® Gold 5420+	28	56	2.0	4.1	52.5	4400	205
Intel® Xeon® Gold 6442Y	24	48	2.6	4.0	60	4800	225
Intel® Xeon® Gold 5418Y	24	48	2.0	3.8	45	4400	185
Intel® Xeon® Silver 4416+	20	40	2.0	3.9	37.5	4000	165
Intel® Xeon® Gold 6444Y	16	32	3.6	4.0	45	4800	270
Intel® Xeon® Gold 6426Y	16	32	2.5	4.1	37.5	4800	185
Intel® Xeon® Gold 5416S	16	32	2.0	4.0	30	4400	150
Intel® Xeon® Silver 4410Y	12	24	2.0	3.9	30	4000	150
Intel® Xeon® Gold 6434	8	16	3.7	4.1	22.5	4800	195
Intel® Xeon® Gold 5415+	8	16	2.9	4.1	22.5	4400	150

Notes:

- 4th Gen Xeon -SP processors all feature Intel® vPro® Technology[3]
- 4th Gen Xeon -SP processors all support Hyper-Threading
- 4th Gen Xeon -SP processors do not offer integrated graphics

[1] Multicore is designed to improve performance of certain software products. Not all customers or software applications will necessarily benefit from use of this technology. Performance and clock frequency will vary depending on application workload and your hardware and software configurations. Intel's numbering, branding and/or naming is not a measurement of higher performance.

[2] Intel Turbo Boost Max (ITBM) performance varies depending on hardware, software and overall system configuration. See http://www.intel.com/technology/turboboost for more information.

[3] Intel vPro® requires Windows 10 Pro 64 bit or higher, a vPro supported processor, vPro enabled chipset, vPro enabled wired LAN and/or Wi-Fi 6E WLAN and TPM 2.0. Some functionality requires additional 3rd party software in order to run. Features of vPro® Essentials and Enterprise vary. See http://intel.com/vpro

Overview

Color	Black
Convertibility	No
Expansion Slots (see system board section for more details)	•Slot 1: PCIe x16 Gen4 •Slot 2: PCIe x16 Gen4 - Available ONLY when 2nd processor is installed •Slot 3: PCIe x4 Gen3 •Slot 4: PCIe x16 Gen5 •Slot 5: PCIe x8 Gen3 •Slot 6: PCIe x16 Gen3 - Available ONLY when 2nd processor is installed •Slot 7: PCIe x4 Gen3
Expansion Bays (see storage section for more details)	4 internal 3.5" bays (All 4 include acoustic dampening rail assemblies) 2 external 5.25" bays (175mm depth limit) 1 dedicated 9.5mm slim optical disk drive bay
Front I/O	Front I/O: 4 SuperSpeed USB Type-A 5 Gbps signaling rate, 1 headphone/microphone combo, SD card reader (optional). [left-most Type-A ports supports BC1.2 (Battery Charging)]
Internal I/O [5]	3 Internal USB ports and 6 SATA ports.
Rear I/O	Audio in/out, 6 SuperSpeed USB Type-A 5 Gbps signaling rate, 2 RJ-45 integrated LAN ports (1 GbE AMT, 1GbE)
Optional I/O	2 10GbE LAN ports
On-board RAID Support	SATA RAID 0 Striped Array SATA RAID 1 Mirrored Array SATA RAID 10 Striped/Mirrored SATA RAID 5 Parity Array
Chassis Dimensions (H x W x D)	Footprint: H: 17.5" [444.5mm] W: 8.5" [215.9mm] D: 21.7" [551.2mm] (measured to the rear of service panel) Maximum: H: 17.5" [444.5mm] W: 8.5" [215.9mm] D: 21.85" [555.2mm] (measured to the embossment for the rear chassis fans)
Packaged Dimensions	H: 25" (636mm) W: 13.1" (332mm) D: 28.9" (734mm)
Palletization Profile	4 units x 3 layers = 12 units per pallet 1200x1000x2034mm (pallet included)
Rack Dimensions	5U
Weight	Exact weights depend upon configuration (System weight only). Minimum: 22.5kg (49.6lbs.) Typical: 24.3kg (53.7lbs.) Maximum: 33.8kg (74.6lbs.)
Temperature	Operating: 5° to 40°C (40° to 104°F)[1] Non-operating: -40° to 60°C (-40° to 140°F) Above 1524 m (5,000 feet) altitude, the maximum operating temperature is reduced by 1° C (1.8° F) for every 305 m (1,000 feet) increase in elevation Maximum rate of change: 10 °C/hr No direct sustained sunlight [1]40°C has been validated for configs up to 2x 270W CPU (Intel Xeon Gold 6430), 2x NVIDIA® RTX A4000 graphics cards, 8x64GB RAM, 4x 2TB M.2 storage, 2x 2TB HDD storage, and 1125W PSU

Overview

Humidity	Operating: Operating: 8% to 85% RH, non-condensing, 35° C maximum wet bulb Non-operating: 8% to 90%, non-condensing, 35° C maximum wet bulb
Maximum Altitude (non-pressurized)[6]	Operating (with Rotational Hard Drives): 3,048 m (10,000 feet) Operating (with only Solid-State Drives): 5,000 m (16,404 feet) Non-operating: 9,144m (30,000ft) **NOTE:** Above 1524 m (5,000 feet) altitude, maximum operating temperature is reduced by 1° C (1.8° F) per 305 m (1,000 feet) elevation increase
Power Supply	Choice of 80 Plus Gold (90% efficiency at 50% load) Power Supplies: • 1125W @110V/15A (Delta Efficiency Report) • 1450W @230V/10A (Delta Efficiency Report)1450W @110V/20A (Delta Efficiency Report) • 1700W @230V/10A (Delta Efficiency Report) **NOTE:** Not all configurations are supported on all power supplies. Configuration support depends on total system power budget and having sufficient number or type of PCIe supplemental power connectors. Confirm power supply and configuration support using configurator on hp.com. • 1125W supports up to 600W of auxiliary graphics power (dependent on system configuration) • 1450W supports up to 600W of auxiliary graphics power (dependent on system configuration) • 1700W supports up to 600W of auxiliary graphics power (dependent on system configuration) **NOTE:** updating graphics after purchase may require additional power distribution cables and/or auxiliary graphics adapters to support the new graphics configuration.
Workstation ISV Certifications	See the latest list of certifications at http://www.hp.com/united-states/campaigns/workstations/partnerships.html
Chipset	Intel® C741 chipset
Memory	16 DIMM slots, supporting up to 1TB, DDR5 4800 MT/s speed depending on the system configuration

Supported Components

Processors

	Factory Configured	Option Kit	Option Kit Part Number	Support Notes
4th Generation Intel® Xeon® Scalable Processors				
Intel® Xeon® Gold 6448Y	Y	Y	6Y3A1AA	1
Intel® Xeon® Gold 6444Y	Y	Y	6Y3A8AA	1
Intel® Xeon® Gold 6442Y	Y	Y	6Y3A5AA	1
Intel® Xeon® Gold 6438Y+	Y	Y	6Y3A2AA	1
Intel® Xeon® Gold 6434	Y	Y	6Y3B2AA	1
Intel® Xeon® Gold 6430	Y	Y	6Y3A3AA	1
Intel® Xeon® Gold 6426Y	Y	Y	6Y3A9AA	1
Intel® Xeon® Gold 5420+	Y	Y	6Y3A4AA	1
Intel® Xeon® Gold 5418Y	Y	Y	6Y3A6AA	1
Intel® Xeon® Gold 5416S	Y	Y	6Y3B0AA	1
Intel® Xeon® Gold 5415+	Y	Y	6Y3B3AA	1
Intel® Xeon® Silver 4416+	Y	Y	6Y3A7AA	1
Intel® Xeon® Silver 4410Y	Y	Y	6Y3B1AA	1

NOTE 1: When ordering two processors, the second processor must be the same as the first. Intel processor numbers are not a measurement of higher performance. Processor numbers differentiate features within each processor family, not across different processor families.

SATA Hard Drives

	Factory Configured	Option Kit	Option Kit Part Number
1TB 7200RPM SATA 3.5in Enterprise HDD	Y	Y	W0R10AA
2TB 7200RPM SATA 3.5in Enterprise HDD	Y	Y	2Z274AA
4TB 7200RPM SATA 3.5in Enterprise HDD	Y	Y	K4T76AA/AT
8TB 7200RPM SATA 3.5in Enterprise HDD	Y	Y	2Z273AA
12TB 7200RPM SATA-6G 3.5in Enterprise HDD	Y	Y	5S461AA

NOTE: Starting November 1, 2023, HP PCs with Windows require Windows to be installed on SSD. HDD can only be configured as additional data drives and not as the boot drive.

PCIe Solid State Drives

	Factory Configured	Option Kit	Option Kit Part Number
Z Turbo 512GB 2280 PCIe-4x4 TLC SSD	Y	Y	38T80AA
Z Turbo 512GB 2280 PCIe-4x4 SED OPAL2 TLC M.2 SSD	Y	Y	38T81AA
Z Turbo 512GB 2280 PCIe-4x4 TLC Z8 Kit SSD	N	Y	360H7AA
Z Turbo 512GB 2280 PCIe-4x4 SED OPAL2 TLC M.2 Z8 Kit SSD	N	Y	360H2AA
Z Turbo 1TB 2280 PCIe-4x4 SED OPAL2 TLC M.2 SSD	Y	Y	38T76AA
Z Turbo 1TB 2280 PCIe-4x4 TLC SSD	Y	Y	38T77AA
Z Turbo 1TB 2280 PCIe-4x4 TLC Z8 Kit SSD	N	Y	360H5AA
Z Turbo 1TB 2280 PCIe-4x4 SED OPAL2 TLC M.2 Z8 Kit SSD	N	Y	360H4AA
Z Turbo 2TB 2280 PCIe-4x4 SED OPAL2 TLC M.2 SSD	Y	Y	38T79AA
Z Turbo 2TB 2280 PCIe-4x4 TLC SSD	Y	Y	38T75AA

Supported Components

Z Turbo 2TB 2280 PCIe-4x4 SED OPAL2 TLC M.2 Z8 Kit SSD	N	Y	360H1AA
Z Turbo 4TB 2280 PCIe-4x4 TLC M.2 SSD[2]	Y	Y	5S496AA/AT
Z Turbo 4TB 2280 PCIe-4x4 SED OPAL2 TLC M.2 SSD[2]	Y	Y	5S497AA/AT
Z Turbo 4TB 2280 PCIe-4x4 SED OPAL2 TLC M.2 Z8 Kit SSD[2]	N	Y	5S4A0AA
HP Z Turbo Drive Dual Pro			
HP Z Turbo Drive Dual Pro PCIe-4x4 NVMe Carrier[1]	Y	Y	56Q86AA
HP Z Turbo Drive Dual Pro 512GB TLC SSD	Y	N	
HP Z Turbo Drive Dual Pro 1TB TLC SSD	Y	N	
HP Z Turbo Drive Dual Pro 2TB TLC SSD	Y	N	
HP Z Turbo Drive Dual Pro 4TB TLC SSD[2]	Y	N	
Intel® Virtual RAID on CPU (Intel® VROC) for NVMe			
Intel VROC NVMe SSD Premium Ctlr Module[3]	N	Y	3FJ81AA
Intel VROC NVMe SSD Standard Ctlr Module[2]	N	Y	3FJ80AA

Note 1: Kit includes dual pro carrier and heatsink. Requires separate purchase of Z Turbo PCIe 4x4 M.2 SSD modules.
Note 2: Enables RAID 0, 1 & 10
Note 3: Enables RAID 0, 1 & 10 plus RAID 5 with write hole closure options

NOTE: Internal M.2 PCIe SSDs are installed using HP Personality Card (up to 2 Personality Cards per system). Each Personality Card can support two M.2 drives.

NOTE: For storage drives, GB = 1 billion bytes. TB = 1 trillion bytes. Actual formatted capacity is less. Up to 36GB of system disk (for Windows) is reserved for system recovery software.

Graphics		Factory Configured	Option Kit	Option Kit Part Number	Supported # of cards
Graphics Cable Adapters	HP DisplayPort To VGA Adapter	N	Y	AS615AA/AT	
	HP DisplayPort To VGA Adapter	N	Y	F7W97AA	
	HP DisplayPort to HDMI Adapter	Y	Y	2JA63AA	
	HP (Bulk 12) miniDP-to-DP Adapter Cables	N	Y	2KW87A6	
	HP Single miniDP-to-DP Adapter Cable	Y	Y	2MY05AA	
	HP miniDP-to-DP Adapter (2-pack)	Y	N		
	HP miniDP-to-DP Adapter (4-pack)	Y	N		
	HP miniDP-to-DP Adapter (8-pack)	Y	N		
	HP DisplayPort To DVI Adapter (Bulk 90)	N	Y	FH973A6	
	NVIDIA NVLink 3-Slot Bridge	Y	Y	340L3AA	
	NVIDIA 3D Stereo Bracket	N	Y	K0A25AA	
Ultra High-End Graphics	NVIDIA® RTX 6000 Ada 48GB[1]	Y	Y	79C23AA/AT	2
	NVIDIA® RTX A6000 48GB	Y	Y	2S6U3AA/AT	2
	AMD Radeon Pro W6800 32 GB[2]	Y	Y	340K7AA	2
	NVIDIA® RTX A5000 24GB	Y	Y	20X23AA/AT	2
	NVIDIA® Quadro® Sync II	N	Y	1WT20AA	
High-End Graphics	NVIDIA® RTX A4500 20GB[1]	Y	Y	5S458AA/AT	2
	NVIDIA® RTX A4000 16GB	Y	Y	20X24AA/AT	2
	NVIDIA® Long-Life RTX A4000E 16GB[1]	Y	Y	6H7J7AA	2

Supported Components

Midrange Graphics	NVIDIA® RTX A2000 12GB	Y	Y	5Z7D9AA/AT	2
	NVIDIA® Long-Life RTX A2000E 12GB	Y	N		2
	NVIDIA® T1000 8GB	Y	Y	5Z7D8AA/AT	2
	NVIDIA® Long-Life T1000E 8GB	Y	Y	6V9V4AA/AT	2
	AMD® Radeon™ Pro W6600 8GB[2]	Y	Y	340K5AA	2
Entry Graphics	NVIDIA® T400 4GB	Y	Y	5Z7E0AA/AT	2
	AMD® Radeon™ RX 6400 4GB[2]	Y	Y	6Q3U4AA/AT	1
	NVIDIA T1000 4 GB	Y	Y	20X22AA/AT	2
	Intel Arc Pro A40 6GB[1]	Y	Y	6E3Y8AA	1

Note 1: available in Summer 2023
Note 2: 2nd AMD graphic card configurable in Summer 2023

Memory	Factory Configured	Option Kit	Option Kit Part Number	Support Notes
32GB (2x16GB) DDR5 4800 DIMM ECC REG Memory	Y	N		
64GB (4x16GB) DDR5 4800 DIMM ECC REG Memory	Y	N		1
64GB (2x32GB) DDR5 4800 DIMM ECC REG Memory	Y	N		
128GB (8x16GB) DDR5 4800 DIMM ECC REG Memory	Y	N		1
128GB (4x32GB) DDR5 4800 DIMM ECC REG Memory	Y	N		1
256GB (16x16GB) DDR5 4800 DIMM ECC REG Memory	Y	N		2
256GB (8x32GB) DDR5 4800 DIMM ECC REG Memory	Y	N		1
256GB (4x64GB) DDR5 4800 DIMM ECC REG Memory	Y	N		1
512GB (16x32GB) DDR5 4800 DIMM ECC REG Memory	Y	N		2
512GB (8x64GB) DDR5 4800 DIMM ECC REG Memory	Y	N		1
1TB (16x64GB) DDR5 4800 DIMM ECC REG Memory	Y	N		2
After Market Options				
16GB (1x16GB) DDR5 4800 DIMM ECC REG Memory	Y	Y	340K1AA	
32GB DDR5 (1x32GB) 4800 DIMM ECC REG Memory	N	Y	340K2AA	
64GB DDR5 (1x64GB) 4800 DIMM ECC REG Memory	N	Y	340K3AA	

Note 1: Memory configuration is available for both single and dual CPU configurations.
Note 2: Memory configuration is only available with dual CPU configuration.

Multimedia and Audio Devices	Factory Configured	Option Kit	Option Kit Part Number
HyperX Cloud Mix Wireless Gaming Headset	N	Y	4P5K9AA
HyperX Cloud Core Gaming Headset	N	Y	4P4F2AA
HyperX Cloud Flight Wireless Gaming Headset	N	Y	4P5L4AA
HyperX Cloud Stinger Core Gaming Headset	N	Y	4P4F4AA
HyperX SoloCast - USB Microphone	N	Y	4P5P8AA
Integrated Realtek ALC 3205-CG	Y	N	

Supported Components

Optical and Removable Storage	Factory Configured	Option Kit	Option Kit Part Number
HP CRU QX428 Removable with 415mm Cable Frame/Carrier[1]	Y	N	
HP DX175 Removable HDD Frame/Carrier[2]	Y	Y	1ZX71AA
HP DX175 Removable HDD Spare Carrier[2]	N	Y	1ZX72AA
HP CRU Secure High Performance Storage Module with 2TB M.2 SSD[3]	Y	Y	56Q87AA
HP CRU Secure High Performance Storage Module with 1TB M.2 SSD[3]	Y	Y	56Q88AA
HP CRU Secure High Performance Storage Module with 512GB M.2 SSD[3]	Y	Y	56Q89AA
HP 9.5mm Slim DVD-ROM Drive	Y	Y	K3R63AA
HP 9.5mm Slim BDXL Blu-Ray Writer Drive	Y	Y	K3R65AA
HP 9.5mm Slim SuperMulti DVD Writer	Y	Y	K3R64AA

Note 1: Optional separate purchase of HP CRU Secure High Performance Storage (SHIPS) Module(s).
Note 2: Only supports 4TB or lower capacity HDDs.
Note 3: HP CRU SHIPS Module Kit contains select M.2 SSD for install into a factory configured front removeable storage carrier (HP CRU QX428 Frame/Carrier).

Networking and Communications	Factory Configured	Option Kit	Option Kit Part Number
HP Dual Port 10GbE NIC G2	Y	Y	360K6AA
Intel® X550 10GBASE-T Dual Port NIC	Y	Y	1QL46AA
Intel® I225-T1 Single Port 2.5GbE PCIe NIC	Y	Y	406L9AA
Intel® Ethernet I350-T4 4-Port 1Gb NIC	N	Y	W8X25AA
Allied Telesis AT-2914SX/LC-901 1GB LC Fiber NIC	Y	Y	1C7Q2AA
Allied Telesis AT-2911T/2-901 Dual Port 1GbE NIC	Y	Y	6E3Y9AA/AT
NVIDIA® Mellanox® ConnectX-6 DX Dual Port 10/25GbE SFP28 NIC [1]	Y	Y	436M8AA
HP 10GbE SFP+ SR/SW LC Fiber Optic Transceiver	Y	Y	860T8AA
HP 25GbE SFP28 LC Fiber Optic Transceiver	Y	Y	860T9AA
Intel AX210 Wi-Fi 6E non-vPro + Bluetooth® 5.2 wireless card with External Antenna WLAN	Y	Y	340L7AA

Note1: Transceivers sold separately. You must have a transceiver installed to connect this card to a network.

HP Anyware Remote System Controller	Factory Configured	Option Kit	Option Kit Part Number
HP Anyware Remote System Controller*	Y	Y	7K6D7AA
HP Anyware Remote System Controller Main Board Adapter*	Y	Y	7K6D8AA
HP Z4/Z6/Z8 G4 / ZCentral 4R Remote System Controller Cable Adapter	Y	Y	7K6E5AA
HP Anyware Integrated Remote System Controller	Y	Y	7K6D9AA
HP Anyware Remote System Controller for Universal KVM	N	Y	7K7N2AA

Supported Components

*Separate purchase of kit 7K6E5AA HP Z4/Z6/Z8 G4/ZCentral 4R Remote System Controller Cable Adapter is required. Kit 7K6E5AA includes the PCIe bracket required to mount the bulkhead PCA for either 7K6D7AA or 7K6D8AA when using with the HP Z4/Z6/Z8 G4, ZCentral 4R, or Z8G5, which do not have a dedicated bulkhead knockout for the bulkhead PCA adapter.

Racking and Physical Security	Factory Configured	Option Kit	Option Kit Part Number
HP Z640/Z840/Z8 G4 Rail Rack Kit	N	Y	2FZ77AA/AT
HP Z8 Rack Rail Upgrade Kit	N	Y	2FZ76AA/AT

Input Devices	Factory Configured	Option Kit	Option Kit Part Number
HP 320K Wired Keyboard	Y	Y	9SR37AA/ET/UT
HP 125 Wired Keyboard	Y	Y	266C9AA/ET/UT
HP 975 USB+BT Dual-Mode Wireless Keyboard	N	Y	3Z726AA/ET/UT
HP 455 Programmable Wireless Keyboard	N	Y	4R177AA/ET/UT/A6
HP Wired Desktop 320MK Mouse and Keyboard	N	Y	9SR36AA/ET/UT
HP 655 Wireless Keyboard and Mouse Combo	N	Y	4R009AA/ET/UT/A6
HyperX Alloy MKW100 - Mechanical Gaming Keyboard	N	Y	4P5E1AA
HP Wired 320M Mouse	Y	Y	9VA80AA/ET/UT
HP Creator 935 Black Wireless Mouse	N	Y	1D0K8AA/ET/UT
HP 128 LSR Wired Mouse	Y	Y	265D9AA/ET/UT
HP 125 Wired Mouse	N	Y	265A9AA/ET/UT
HyperX Pulsefire Haste Black Wireless Gaming Mouse 2	N	Y	6N0B0AA
HyperX Pulsefire Haste White Wireless Gaming Mouse 2	N	Y	6N0A9AA
HyperX Pulsefire Core - Gaming Mouse	N	Y	4P4F8AA
HP Business Slim Smartcard Keyboard	Y	Y	Z9H48AA/AT

NOTE: Keyboard and Mouse are optional or add on features.

Other Hardware	Factory Configured	Option Kit	Option Kit Part Number
HP C13 1.83m Power Cord Kit (halogen-free)	Y	N	
HP Z8 1450W C19 2.5m Power Cord Kit[3,**]	N	Y	6Z9V1AA
HP 2.5in to 3.5in HDD Adapter Kit	N	Y	J5T63AA/A6
HP Internal Serial+PS/2 Port	Y	Y	56Q78AA
HP Dual TBT4 PCIe x4 Low Profile Card[5]	Y	Y	340L1AA
HP USB 2.0 Type-A Port Adapter Kit[4]	Y	Y	79C24AA
HP 2.5in HDD/SSD 2-in-1 Optical Bay Bracket	N	Y	K4T74AA
HP Optical Bay HDD Mounting Bracket[1]	N	Y	NQ099AA
HP SD 4 Card Reader Zx G4	Y	Y	2VK54AA
HP C13 1.83m Power Cord Kit[2,*]	N	Y	6Z1T9AA

Supported Components

*Does not support HP Z8 G5 1450W PSU.
**Does not support HP Z8 G5 1125W PSU.

Note 1: NQ099AA HP Optical Bay HDD Mounting Bracket is required as a separate purchase for HDD option kits installed into an external bay.
Note 2: 6Z1T9AA is only for 1125W PSU Z8 G5.
Note 3: 6Z9V1AA is only for 1450W PSU Z8 G5.
Note 4: The USB 2.0 Type-A Port Adapter Kit has a single USB 2.0 type A connector.
Note 5: Available in July 2023

Software

	Factory Configured	Option Kit	Support Notes
HP Anyware	Y	N	
HP Performance Advisor	Y	N	1
HP PC Hardware Diagnostics UEFI (Windows OS only)	Y	N	2
HP PC Hardware Diagnostics Windows	Y	N	
HP Wolf Security	Y	N	3
HP Notifications	Y	N	
HP Desktop Support Utility	Y	N	
HP Documentation	Y	N	
myHP	Y	N	
HP Easy Clean	Y	N	
Kingsoft WPS Office	Y	N	4
Z by HP Data Science Stack Manager	Y	N	5, 6
WSL2/Ubuntu Data Science Stack	Y	N	5
HP Image Assistant	N	N	
HP Support Assistant	N	N	
HP Smart Health	N	N	

Note 1: Supported with Windows only. Also available as a free download from http://www.hp.com/go/performanceadvisor
Note 2: Windows OS only
Note 3: Not available in Russia
Note 4: Not available in China
Note 5: Only available with NVIDIA® graphics
Note 6: Only available with Ubuntu

Operating Systems Windows 11 Pro for Workstations[1,2]
Windows 11 Pro for Workstations (preinstalled with Windows 10 Pro for Workstations Downgrade)[1,2,3]
Ubuntu 22.04 LTS[4]
HP Linux®-ready

[1] Windows Enterprise sold separately and requires that customer have an enterprise license from Microsoft.
[2] Not all features are available in all editions or versions of Windows. Systems may require upgraded and/or separately purchased hardware, drivers, software or BIOS update to take full advantage of Windows functionality. Windows is automatically updated and enabled. High speed internet and Microsoft account

Supported Components

required. ISP fees may apply and additional requirements may apply over time for updates. See http://www.windows.com.
[3]This system is preinstalled with Windows 10 Pro software and also comes with a license for Windows 11 Pro software and provision for recovery software. You may only use one version of the Windows software at a time. Switching between versions will require you to uninstall one version and install the other version. You must back up all data (files, photos, etc.) before uninstalling and installing operating systems to avoid loss of your data.
[4] Not all features are available in all editions or versions of Ubuntu. Systems may require upgraded and/or separately purchased hardware, drivers, software or BIOS to take full advantage of Ubuntu functionality. Ubuntu may be automatically updated. ISP fees may apply and additional requirements may apply over time for updates.

NOTE: Your product does not support Windows 8 or Windows 7. In accordance with Microsoft's support policy, HP does not support the Windows® 8 or Windows 7 operating system on products configured with Intel® and AMD® 7th generation and forward processors or provide any Windows® 8 or Windows 7 drivers on http://www.support.hp.com. A full list of HP products and the Windows 10 versions tested is available on the HP support website. https://support.hp.com/us-en/document/c05195282

HP BIOS

Key features of the HP BIOS include:

- Deployment and manageability – HP BIOS provides several technologies that help integrate the HP Z8 G5 Workstation into the enterprise, such as PXE, remote recovery, remote configuration, remote control, and BIOS (F10) Setup support for 15 languages.
- Network firmware updates –Update your BIOS via the cloud or standardize on a BIOS version hosted on an Enterprise network.
- Stability – HP BIOS supports the HP stable product roadmap by releasing only critical BIOS changes to the factory and advanced change notification.
- Class 3 UEFI specification version 2.7
- Absolute Persistence agent – For tracking and tracing services, available in select countries, separate software and purchase of a subscription is required.
- Thermal and power management – The HP BIOS provides and enables thermal and power management technologies so component temperatures are managed for high reliability and to assist in operating the HP Workstation computer in any enterprise environment.
- Acoustic performance – Industry leading acoustic emissions across the range of operating conditions.
- Serviceability – HP BIOS provides diagnostic and detailed service information.
- Upgrades and recovery – HP BIOS provides numerous ways to upgrade HP Workstation computers, including BIOS updates from within Windows (HP Firmware Update and Recovery), Capsule update, HP Client Manager, and fail-safe recovery. In addition, the HP BIOS Configuration Utility enables replication of BIOS settings within Windows while the Replicated Setup feature provides the same capability within BIOS (F10) Setup. The BIOS Configuration Utility is available from the HP support website.
- HP BIOS uses PKI signing of the BIOS for trusted BIOS upgrades and recovery. Additional HP BIOS Features:
  - Power-On password – Helps prevent an unauthorized user from powering on the system.
  - Administrator password – Also known as the BIOS Setup password, this helps prevent unauthorized changes to the system configuration. If the administrator password is not known, the BIOS cannot be updated and changes cannot be made to BIOS settings using BIOS Setup or under the OS.
  - S4/S5 Maximum Power Savings setting supports EU Lot6 requirement and allows the computer to power down below 0.5W in S4/S5 (when turned off). When S4/S5 Maximum Power Savings feature is enabled below features are turned off:
    - Power to expansion connectors / slots
    - Most Wake events other than power buttons and WOL (Wake on LAN supported by embedded Lan controller under S4/S5 Maximum Power Saving Enabled)
    - USB charging ports

HP Sure Start Gen7

- BIOS Integrity checking – Sure Start protection ensures that only trusted BIOS code is executed and not rootkits, viruses and malware. Verification is done upon boot up, shutdown and while the system is on.
- Sure Start is set by default to automatically repair the BIOS if corrupted or compromised but is policy driven for better manageability. Start is set by default to automatically repair the BIOS if corrupted or compromised but is policy driven for better manageability.
- Protecting beyond BIOS – Integrity checking and repair is extended to other data that should be protected such as network configuration parameters, platform specific information (i.e. system IDs), secure boot credentials, and other code the system needs to boot.
- Audit enabled – System Audit via Sure Start Event Logs capture data such as incident, repair date and time for troubleshooting and investigating.

SOFTWARE COMPONENTS AND APPLICATIONS WITH WINDOWS

BIOS
HP BIOSphere Gen6[13]
HP DriveLock & Automatic DriveLock
BIOS Update via Network
Master Boot Record Security
Power On Authentication
Absolute Persistence Module[23]
Pre-boot Authentication
HP Wireless Wakeup

Software
HP Desktop Support Utility
HP Performance Advisor[1]
HP Privacy Settings
HP Notifications
myHP
HP Services Scan[25]

Manageability Features
HP Driver Packs[2]
HP System Software Manager (SSM)
HP BIOS Config Utility (BCU)
HP Client Catalog
HP Manageability Integration Kit Gen6[3]

Client Security Software
HP Wolf Security (Including HP Sure Click & HP Sure Sense)[22]
HP Pro Wolf Security (Including Credential Manager)[18]
HP Client Security Manager Gen 7[4]
HP Sure Run[9]
HP Sure Recover[10]
HP Power On Authentication
Microsoft Defender[7]

Security Management
HP Security Update Service (SUS)
Secure Erase[16]
TPM 2.0 Embedded Security Chip(Common Criteria EAL4+ Certified)[24]
SATA port disablement (viaBIOS)
Serial, USB enable/disable (viaBIOS)
Power-on password (viaBIOS)
Setup password (viaBIOS)
Support for chassis padlocks and cable lock devices
Integrated hood sensor0
HP Sure Start Gen4[8]

[1] HP Performance Advisor Software - HP Performance Advisor is ready to help you get the most out of your HP Workstation from day one—and every day after. Learn more or download at: http://hp.com/PerformanceAdvisor

[2] HP Driver Packs not preinstalled, however available for download at http://www.hp.com/go/clientmanagement.

[3] HP Manageability Integration Kit can be downloaded from https://ftp.ext.hp.com/pub/caps-softpaq/cmit/HPMIK.html

[4] HP Client Security Manager Gen7 requires Windows and is available on the select HP PCs.

[7] Microsoft Defender Opt in and internet connection required for updates.

[8] HP Sure Start Gen 7 is available on select HP PCs and workstations. See product specifications for availability.

[9] HP Sure Run Gen5 is available on select Windows 11 based HP Pro, Elite and Workstation PCs with select Intel® or AMD processors

[10] HP Sure Recover Gen4 is available on select HP PCs and requires Windows 10 and an open network connection. You must back up important files, data, photos, videos, etc. before using HP Sure Recover to avoid loss of data. Network based recovery using Wi-Fi is only available on PCs with Intel Wi-Fi Module

[13] HP BIOSphere Gen6 features may vary depending on the platform and configurations.

[16] Secure Erase - For the methods outlined in the National Institute of Standards and Technology Special Publication 800-88 "Clear" sanitation method. HP Secure Erase does not support platforms with Intel® Optane.

[18] HP Wolf Pro Security Edition is available preloaded on select SKUs and, depending on the HP product purchased, includes a paid 1-year or 3-year license. The HP Wolf Pro Security Edition software is licensed under the license terms of the HP Wolf Security Software - End-User license Agreement (EULA) that can be found at: https://support.hp.com/us-en/document/ish_3875769-3873014-16 as that EULA is modified by the following: "7. Term. Unless otherwise terminated earlier pursuant to the terms contained in this EULA, the license for the HP Wolf Pro Security Edition (HP Sure Sense Pro and HP Sure Click Pro) is effective upon activation and will continue for either a twelve (12) month or thirty-six (36) month license term ("Initial Term"). At the end of the Initial Term you may either (a) purchase a renewal license for the HP Wolf Pro Security Edition from HP.com, HP Sales or an HP Channel Partner, or (b) continue using the standard versions of HP Sure Click and HP Sure Sense at no additional cost with no future software updates or HP Support.

[22] HP Wolf Security for Business requires Windows 10 or higher, includes various HP security features and is available on HP Pro, Elite, RPOS and Workstation products. See product details for included security features

[23] Absolute agent is shipped turned off, and will be activated when customers activate a purchased subscription. Subscriptions can be purchased for terms ranging multiple years. Service is limited, check with Absolute for availability outside the U.S. The Absolute Recovery Guarantee is a limited warranty. Certain conditions apply. For full details visit: http://www.absolute.com/company/legal/agreements/computrace-agreement. Data Delete is an optional service provided by Absolute Software. If utilized, the Recovery Guarantee is null and void. In order to use the Data Delete service, customers must first sign a Pre-Authorization Agreement and either obtain a PIN or purchase one or more RSA SecurID tokens from Absolute Software.

[24] Firmware TPM is version 15.21. Hardware TPM is v2.0.

[25] HP Services Scan is provided with Windows Update on select products and will check entitlement on each hardware device to determine if an HP TechPulse-enabled service has been purchased, and will download applicable software automatically. HP TechPulse is a telemetry and analytics platform that provides critical data around devices and applications. For full system requirements or to disable this feature, please visit http://www.hpdaas.com/requirements . Not applicable in China.

System Board

System Board Form Factor	Approximately 415.04mm x 386.08mm (16.34 x 15.20 inches)	
Processor Socket	Dual LGA-4677	
CPU Bus Speed	DMI Gen3 x 8 lanes. 3 UPI x24 interconnects between CPUs that operate at 16GT/s	
Chipset	Intel C741 Emmitsburg PCH	
Super I/O Controller	Nuvoton SIO21	
Memory Expansion Slots	16 DDR5 memory slots (only 8 DDR5 memory slots with single CPU installed)	
Memory Type Supported	DDR5, RDIMM (Registered) ECC	
Memory Modes	Non-Interleaved for single channel. Interleaved when multiple channels are populated	
Memory Speed Supported	Max memory speed is processor-dependent, refer to processor table for more details: 4800MT/s DDR5 or 4400MT/s DDR5 or 4000MT/s DDR5	
Memory Protection	ECC	
Maximum Memory	1TB	
Memory Configuration (Supported)	16GB, 32GB and 64GB RDIMMs are supported. 64GB RDIMMs cannot be mixed with other module capacities in the same system.	
NVDIMM Memory	No	
PCI Express Connectors	CPU0 Standard PCIe Slots: • 1 PCI Express Gen5 slot x16 mechanical/ x16 electrical (full height, full length) • 1 PCI Express Gen4 slot x16 mechanical/ x16 electrical (full height, full length) • 1 PCI Express Gen3 slot x8 mechanical/ x8 electrical (full height, full length) • 1 PCI Express Gen3 slot x4 mechanical/ x4 electrical (full height, full length) CPU0 Personality Slots: • 1 PCI Express Gen4 slot x8 mechanical/ x8 electrical (full height, half length) (supports two x4 M.2 devices per personality slot) CPU0 Other PCIe Connections • 1 Front NVMe Storage SlimSAS PCIe Gen4 x8 (supports two x4 M.2 devices via QX428) • 1 10GbE (PCIe Gen3 x4) CPU 1 Standard PCIe Slots: • 1 PCI Express Gen4 slot x16 mechanical/ x16 electrical (full height, full length) • 1 PCI Express Gen3 slot x16 mechanical/ x16 electrical (full height, full length) CPU1 Personality Slots: • 1 PCI Express Gen4 slot x8 mechanical/ x8 electrical (full height, half length) (supports two x4 M.2 devices per personality slot) PCH Standard PCIe Slots: • 1 PCI Express Gen3 slot x4 mechanical/ x4 electrical (full height, full length)	
Supported Drive Interfaces	**SATA**	Number of SATA ports: 6 Intel® SATA controller: secondary SATA
	Integrated RAID	On-board RAID Support Intel® VROC® SATA RAID 0, 1, 5, and 10 supported on Windows 10 and 11, RHEL 8.6 and later, SLE 15 SP4 and later Intel® VROC® NVMe RAID 0, 1, 5, and 10 supported with presence of appropriate VROC upgrade module (after-market kits) on Windows 10 and 11, RHEL 8.6 and later, SLE 15 SP4 and later

		Factory Configured RAID: None
	Integrated Graphics	No
	Network Controller	Intel WGI210AT and WGI219LM. WGI219LM LOM provides Management capabilities: WOL, PXE 2.1, DASH 1.1 and AMT
	External SATA (eSATA)	No
	Serial	1 internal header (requires optional Serial Port Adapter Kit)
	2nd Serial	No
	HD Integrated Audio	Yes
USB Connector(s)	**Front**	Front I/O: 4x USB 3.1 Gen1 Type-A (left-most port supports Battery Charging 1.2) • Charging USB Type-A port provides 1.5 Amps @ 5 Volts • Standard USB Type-A Ports provide 900mA @ 5 Volts
	Rear	6x USB 3.1 Gen1 Type-A via USB hub.
	Internal	1 USB 3.1 Gen1 (via USB hub) header, with a single 12-pin shrouded connector. This header supports a USB Media Card reader. 1 USB 2.0 single port header 1 USB 2.0 dual port header
Flash ROM	Yes	
CPU Fan Header	Yes (CPU0 and CPU1)	
Memory Fan Header	No	
Chassis Fan Header	Yes (2)	
Front PCI Fan Header	Via Aux fan header if needed.	
Front Control Panel/Speaker Header	Yes	
CMOS Battery Holder - Lithium	Yes	
Integrated Trusted Platform Module	Integrated TPM 2.0. Convertible to FIPS 140-2 Certified Mode through firmware v15.21. The TPM module is disabled where restricted by law.	
Power Supply Headers	Yes	
Power Switch, Power LED & Hard Drive LED Header	Yes	
Clear Password Jumper	Yes	
Keyboard/Mouse	USB and PS/2 (option)	

[1]Maximum memory capacities assume 64-bit operating systems, such as Genuine Windows® 11 Professional 64 bit, Red Hat Linux 64-bit.
[2]M.2 storage supports compatible devices up to 80mm

System Configurations		
Example Configuration #1	**Processor Info**	1x Intel® Xeon® 5415+ 8C 2.9GHz 150W
	Memory Info	32GB DDR5 (2x16GB) RegRAM
	Graphics Info	1x NVIDIA® A2000
	Disks/Optical/Floppy	1x 1TB Internal SATA HDD + 1x DVDRW SATA
	PSU	1125W
	Other	N/A

Energy Consumption (Watts)		115 VAC		230 VAC		100 VAC	
		LAN Enabled	LAN Disabled	LAN Enabled	LAN Disabled	LAN Enabled	LAN Disabled
	Windows Idle (S0)	97.783		93.632		96.522	
	Windows Busy Typ (S0)	255.653		253.33		252.18	
	Windows Busy Max (S0)	258.699		253.884		253.224	
	Sleep (S3)	4.266	4.178	4.246	4.189	4.218	4.176
	Off (S5)	1.689	1.681	1.699	1.697	1.654	1.631
	Zero Power Mode (EuP)	0.221		0.323		0.219	

Heat Dissipation (Btu/hr)		115 VAC		230 VAC		100 VAC	
		LAN Enabled	LAN Disabled	LAN Enabled	LAN Disabled	LAN Enabled	LAN Disabled
	Windows Idle (S0)	333.635		319.472		329.333	
	Windows Busy Typ (S0)	872.288		864.362		860.438	
	Windows Busy Max (S0)	882.681		866.252		864.000	
	Sleep (S3)	14.556	14.255	14.487	14.293	14.392	14.249
	Off (S5)	5.763	5.736	5.797	5.790	5.643	5.565
	Zero Power Mode (EuP)	0.754		1.102		0.747	

Example Configuration #2	**Processor Info**	2x Intel® Xeon® 5415+ 8C 2.9GHz 150W
	Memory Info	64GB DDR5 (4x16GB) RegRAM
	Graphics Info	1x NVIDIA® A4000
	Disks/Optical/Floppy	2x 1TB SATA HDD + 2x 4TB Internal M.2 SSD + 1x DVDRW SATA
	PSU	1125W
	Other	N/A

Energy Consumption (Watts)		115 VAC		230 VAC		100 VAC	
		LAN Enabled	LAN Disabled	LAN Enabled	LAN Disabled	LAN Enabled	LAN Disabled
	Windows Idle (S0)	167.365		158.346		166.35	
	Windows Busy Typ (S0)	474.655		472.688		471.555	
	Windows Busy Max (S0)	508.788		506.355		506.141	
	Sleep (S3)	5.785	5.682	5.564	5.488	5.543	5.418
	Off (S5)	2.217	2.117	2.237	2.268	2.208	2.104
	Zero Power Mode (EuP)	0.246		0.351		0.238	

		115 VAC	230 VAC	100 VAC

System Technical Specifications

		LAN Enabled	LAN Disabled	LAN Enabled	LAN Disabled	LAN Enabled	LAN Disabled
Heat Dissipation (Btu/hr)	Windows Idle (S0)	571.049		540.277		567.586	
	Windows Busy Typ (S0)	1619.523		1612.811		1608.946	
	Windows Busy Max (S0)	1735.985		1727.683		1726.953	
	Sleep (S3)	19.738	19.387	18.984	18.725	18.913	18.486
	Off (S5)	7.564	7.223	7.633	7.738	7.534	7.179
	Zero Power Mode (EuP)	0.839		1.197		0.812	

Example Configuration #3	**Processor Info**	2x Intel® Xeon® 6426Y 2.6GHz 16C 185W
	Memory Info	256GB DDR5 (16x16GB) RegRAM
	Graphics Info	1x NVIDIA® A6000
	Disks/Optical/Floppy	4x 4TB Internal M.2 SSD + 1x DVDRW SATA
	PSU	1450W
	Other	N/A

		115 VAC		230 VAC		100 VAC	
Energy Consumption (Watts)		LAN Enabled	LAN Disabled	LAN Enabled	LAN Disabled	LAN Enabled	LAN Disabled
	Windows Idle (S0)	200.685		196.652		198.568	
	Windows Busy Typ (S0)	627.685		625.992		625.147	
	Windows Busy Max (S0)	658.742		654.668		653.472	
	Sleep (S3)	7.689	7.599	7.674	7.569	7.673	7.558
	Off (S5)	2.425	2.418	2.498	2.459	2.368	2.407
	Zero Power Mode (EuP)	0.278		0.469		0.269	

		115 VAC		230 VAC		100 VAC	
Heat Dissipation (Btu/hr)		LAN Enabled	LAN Disabled	LAN Enabled	LAN Disabled	LAN Enabled	LAN Disabled
	Windows Idle (S0)	684.737		670.977		677.514	
	Windows Busy Typ (S0)	2141.661		2135.885		2133.002	
	Windows Busy Max (S0)	2247.628		2233.727		2229.646	
	Sleep (S3)	26.235	25.928	26.184	25.825	26.180	25.788
	Off (S5)	8.274	8.250	8.523	8.390	8.080	8.213
	Zero Power Mode (EuP)	0.949		1.682		0.918	

Example Configuration #4	**Processor Info**	2x Intel® Xeon® 6430 32C 1.9GHz 270W
	Memory Info	1024GB DDR5 (16x64GB) RegRAM
	Graphics Info	2x NVIDIA® A6000
	Disks/Optical/Floppy	4x 4TB Internal M.2 SSD + 1x DVDRW SATA
	PSU	1450W
	Other	N/A

		115 VAC		230 VAC		100 VAC	
Energy Consumption (Watts)		LAN Enabled	LAN Disabled	LAN Enabled	LAN Disabled	LAN Enabled	LAN Disabled
	Windows Idle (S0)	238.334		216.387		236.884	

System Technical Specifications

	Windows Busy Typ (S0)	830.883		827.664		826.456	
	Windows Busy Max (S0)	977.655		974.662		973.481	
	Sleep (S3)	18.864	18.175	18.688	18.162	18.674	18.115
	Off (S5)	2.738	2.718	2.748	2.729	2.721	2.705
	Zero Power Mode (EuP)	0.297		0.438		0.296	

		115 VAC		230 VAC		100 VAC	
Heat Dissipation (Btu/hr)		LAN Enabled	LAN Disabled	LAN Enabled	LAN Disabled	LAN Enabled	LAN Disabled
	Windows Idle (S0)	813.196		738.312		808.248	
	Windows Busy Typ (S0)	2834.973		2823.990		2819.868	
	Windows Busy Max (S0)	3335.759		3325.547		3321.517	
	Sleep (S3)	64.357	62.013	63.763	61.969	63.716	61.808
	Off (S5)	9.342	9.274	9.376	9.311	9.284	9.229
	Zero Power Mode (EuP)	1.013		1.734		1.010	

NOTE: The numbers in this table are from actual measurements on a single system. There will be some variation from unit to unit.

NOTE: The busy power number and associated BTU/hr number for each configuration will be a strong function of the actual application software run on the system. There can be a great deal of variation in this number.

NOTE: The Power Supply Efficiency report may be found at the following links:
https://www.plugloadsolutions.com/80PlusPowerSuppliesDetail.aspx?id=0&type=2

System Technical Specifications

Operating Voltage Range	90-269 VAC
Rated Voltage Range	100-240 VAC
Rated Line Frequency	50-60 Hz
Operating Line Frequency Range	47-66 Hz
ENERGY STAR® certified (Config Dependent)	Yes
CECP Compliant @ 220V	Yes
FEMP Standby Power Compliant	Yes, with Wake-on-LAN disabled: <1W in S5 - Power Off
Built-in Self Test (BIST) **LED**	Yes
Surge Tolerant Full Ranging Power Supply (withstands power surges up to 2000V)	Yes
Hood Lock Header	Yes
ErP Lot 6- Tier 1 Compliance @ 230V (<1W in S5 - Power Off)	Yes
ErP Lot 6- Tier 2 Compliance @ 230V (<0.5W in S5 - Power Off)	Yes

Declared Noise Emissions (Entry-level, Mid-level, and High-end configurations; tested on floor)			
System Configuration (Entry level)	**Processor Info**	1 x Intel Sapphire Rapids 16C 150W	
	Memory Info	2 x 16GB DDR5-4800 RDIMM	
	Graphics Info	1 x NVIDIA RTX A2000	
	Disks/Optical	1 x 1TB HDD / Blu-Ray R/RE DVD+/-RW	
	Power Supply	1125W	
Declared Noise Emissions		**Sound Power** (LWAd, bels)	**Deskside Sound Pressure** (LpAm, decibels)
	Idle	3.8	19
	Hard drive Operating (Drive Random Seek)	3.9	20
	Active Mode	3.8	19
System Configuration (Mid-level)	**Processor Info**	2 x Intel Sapphire Rapids 16C 150W	
	Memory Info	4 x 16GB DDR5-4800 RDIMM	
	Graphics Info	1 x NVIDIA RTX A4000	
	Disks/Optical	2 x 512GB M.2 + 2 x 1TB HDD / Blu-Ray DVD+/-RW	
	Power Supply	1125W	
Declared Noise Emissions		**Sound Power** (LWAd, bels)	**Deskside Sound Pressure** (LpAm, decibels)
	Idle	3.7	19
	Hard drive Operating (Drive Random Seek)	3.8	21

System Technical Specifications

	Active Mode	3.8	20
System Configuration (High-end)	**Processor Info**	2 x Sapphire Rapids 32C 270W	
	Memory Info	16 x 64 GB DDR5-4800 RDIMM	
	Graphics Info	2 x NVIDIA RTX A6000	
	Disks/Optical	4 x 4TB M.2 + 4 x 8TB HDD / Blu-Ray DVD+/-RW	
	Power Supply	1450W	
Declared Noise Emissions		**Sound Power** (LWAd, bels)	**Deskside Sound Pressure** (LpAm, decibels)
	Idle	4.0	24
	Hard drive Operating (Drive Random Seek)	4.2	24
	Active Mode	4.1	24

Environmental Requirements	**Temperature**	Operating: 5° to 40°C (40° to 104°F)[1] Non-operating: -40° to 60°C (-40° to 140°F) [1]40°C has been validated for configs up to 2x 270W CPU (Intel Xeon Gold 6430), 2x NVIDIA® RTX A4000 graphics cards, 8x64GB RAM, 4x 2TB M.2 storage, 2x 2TB HDD storage, and 1125W PSU
	Humidity	Operating: 8% to 85% RH, non-condensing Non-operating: 8% to 90% RH, non-condensing
	Maximum Altitude	Operating (with Rotational Hard Drives): 3,048 m (10,000 feet) Operating (with only Solid-State Drives): 5,000 m (16,404 feet) Non-operating: 9,144 m (30,000 feet)
	Dynamic	Shock Operating: ½-sine: 40g, 2-3ms (~62 cm/sec) Non-operating: ½-sine: 160 cm/s, 2-3ms (~105g) square: 422 cm/s, 20g **NOTE:** Values represent individual shock events and do not indicate repetitive shock events Vibration Operating random: 0.5g (rms), 5-300 Hz, up to 0.0025g²/Hz Non-operating random: 2.0g (rms), 5-500 Hz, up to 0.0150 g²/Hz **NOTE:** Values do not indicate continuous vibration.
	Cooling	Above 1524 m (5,000 feet) altitude, the maximum operating temperature is reduced by 1° C (1.8° F) for every 305 m (1,000 feet) increase in elevation, up to 3048 m (10,000 feet)

Physical Security and Serviceability

Access Panel	Tool-less Includes system board and memory information
Optical Drive	Tool-less, 2nd Optical Drive requires a 5.25" bay carrier
Hard Drives	Tool-less
Expansion Cards	Tool-less
Processor Socket	Screw-in processor coolers
Blue User Touch Points	Yes, on tool-less internal chassis mechanisms
Color-coordinated Cables and Connectors	Yes
Memory	Tool-less
System Board	Tool-less, retained by Front Card Guide and Top Memory Fan Holder
Power and HD LED on Front of Computer	Yes
Configuration Record SW	Yes
Over-Temp Warning on Screen	Yes
Dual Function Front Power Switch	Yes, causes a fail-safe power off when held for 4 seconds
Padlock Support	No
Cable Lock Support	Yes, Kensington Cable Lock (optional): Prevents entire system theft only. 3mm x 7mm slot at rear of system
Universal Chassis Clamp Lock Support	No
Solenoid Lock and Hood Sensor	No
Rear Port Control Cover	No
Serial, USB, Audio, Network, Enable/Disable Port Control	Yes
Removable Media Write/Boot Control	Yes
Power-On Password	Yes
Setup Password	Yes, prevents an unauthorized person from changing the workstation configuration.
3.3V Aux Power LED on System PCA	None
NIC LEDs (integrated) (Green & Amber)	Yes
CPUs and Heatsinks	A torx driver (T30) is needed to remove the processor heatsink. CPU attached to heatsink via tool-less clip
Power Supply Diagnostic LED	Yes
Front Power Button	Yes
Front Power LED	Yes, white (normal), red (fault)
Front Hard Drive Activity LED	Yes, white
Front ODD Activity LED	Yes
Internal Speaker	Yes

System/Emergency ROM Flash Recovery	Yes
Cooling Solutions	Air cooled forced convection
Power Supply Fans	2x - Dual Side Inlet Blowers
CPU Heatsink Fan	92 mm x 92 mm x 25.4 mm for each CPU
Chassis Fan	Rear: 120 mm x 38 mm Front Lower: 120 mm x 25.4 mm (PCIe zone)
Memory Heatsink Fan	Front Upper: 92mm x 25mm (upper memory bank); Front Middle: 80mm x 25mm (lower memory bank)
HP PC Hardware Diagnostics UEFI	HP PC Hardware Diagnostics (UEFI) enables hardware level testing outside the operating system on many components. The diagnostics can be invoked by pressing F2 at POST, and is available as a download from HP Support.
Access Panel Key Lock	Yes, left access panel
ACPI-Ready Hardware	Advanced Configuration and Power Management Interface (ACPI). • Allows the system to wake from a low power mode. • Controls system power consumption, making it possible to place individual cards and peripherals in a low-power or powered-off state without affecting other elements of the system.
Integrated Chassis Handles	Yes, front and rear
Power Supply	Tool-less, rear access direct-connect (blind-mate)
PCI Card Retention	Yes, rear (all), middle (full-height cards), front (cards with extender)
Flash ROM	Yes
Diagnostic Power Switch LED on board	Yes
Clear Password Jumper	Yes
Clear CMOS Button	Yes
CMOS Battery Holder	Yes
DIMM Connectors	Yes

Service, Support, and Warranty

On-site Warranty and Service[1]: One-year, limited warranty and service offering delivers on-site, next business-day[2] service for parts and labor and includes free telephone support[3] 8am - 5pm. Global coverage[2] ensures that any product purchased in one country and transferred to another, non-restricted country will remain fully covered under the original warranty and service offering. 24/7 operation will not void the HP warranty. Storage devices are not covered under warranty for 24/7 operation except for Enterprise class HDDs.

NOTE 1: Terms and conditions may vary by country. Certain restrictions and exclusions apply.
NOTE 2: On-site service may be provided pursuant to a service contract between HP and an authorized HP third-party provider, and is not available in certain countries. Global service response times are based on commercially reasonable best effort and may vary by country.
NOTE 3: Technical telephone support applies only to HP-configured, HP and HP-qualified, third-party hardware and software. Toll-free calling and 24x7 support service may not be available in some countries.
HP Care Pack Services extend service contracts beyond the standard warranties. Service starts from date of hardware purchase. To choose the right level of service for your HP product, use the HP Care Pack Services Lookup Tool at: http://www.hp.com/go/lookuptool. Service levels and response times for HP Care Packs may vary depending on your geographic location.

Certification and Compliance

Environmental Sustainability questions concerning:

- Ecolabels (EPEAT, TCO, etc.)

System Technical Specifications

- ENERGY STAR, California Energy Commission (CEC)
- Compliance with Environmental legislation (EU ErP, China CECP, EU RoHS and other countries)
- Supply Chain Social Environmental Responsibility (SER) (conflict minerals; human rights, etc.)
- Product specific environmental features (material content, packaging content, recycled content, etc.)
- China Energy Label (CEL)
-

Please contact sustainability@hp.com

For country specific Regulatory Compliance approval documents or Regulatory and Safety questions concerning:

- Declarations of Conformity (for self-service, go to https://www.hp.com/uk-en/certifications/technical/regulations-certificates.html?jumpid=ex_r135_uk/en/any/corp/hpuk-mu_chev/certificates)
- GS Certificates
- Product Safety Certificates (UL, CB, BIS, etc.)
- EMC Certificates, Declarations of Conformity, or Certificates of Conformity (CE, FCC, ICES, etc.)
- CCC Certificates
- Ergonomics
-

Please contact techregshelp@hp.com

BIOS

PCIe 5.0 Support	Full BIOS support for PCI Express through industry standard interfaces. Supported speeds and slot information vary.
ATA/ATAPI	AT Attachment 6 with Packet Interface (ATA/ATAPI-6), Revision 3b
WMI Support	WMI is Microsoft's implementation of Web-Based Enterprise Management (WBEM) for Windows. WMI is fully compliant with the Distributed Management Task Force (DMTF) Common Information Model (CIM) and WBEM specifications.
BIOS Power On	Users can define a specific date and time for the system to power on.
ROM Based Computer Setup Utility (F10)	Review and customize system configuration settings controlled by the BIOS.
System/Emergency ROM Flash Recovery with Video	Recovers system BIOS in corrupted Flash ROM.
Replicated Setup	Saves BIOS settings to USB flash device in human readable file (HpSetup.txt). BiosConfigurationUtility.exe utility can then replicate these settings on machines being deployed without entering Computer Configuration Utility (F10 Setup).
SMBIOS	System Management BIOS Reference Specification, Version 3.2
Boot Control	Disables the ability to boot from removable media on supported devices.
Memory Change Alert	Alerts management console if memory is removed or changed.
Thermal Alert	Monitors the temperature state within the chassis. Three modes: • NORMAL - normal temperature ranges. • ALERTED - excessive temperatures are detected. Raises a flag so action can be taken to avoid shutdown or provide for a smoother system shutdown. • SHUTDOWN - excessive temperatures are encountered. Automatically shuts down the computer without warning before hardware component damage occurs.
Remote ROM Flash	Provides secure, fail-safe ROM image management from a central network console.
ACPI (Advanced Configuration and Power Management Interface)	Allows the system to enter and resume from low power modes (sleep states). Enables an operating system to control system power consumption based on the dynamic workload. Makes it possible to place individual cards and peripherals in a low-power or powered-off state without affecting other elements of the system. Supports ACPI 6.0 for full compatibility with 64-bit operating systems.
Ownership Tag	A user-defined string stored in non-volatile memory that is displayed in the BIOS splash screen.

System Technical Specifications

Remote Wakeup/Remote Shutdown	System administrators can power on, restart, and power off a client computer from a remote location.
Instantly Available PC (Suspend to RAM - ACPI sleep state S3)	Allows for very low power consumption with quick resume time.
Remote System Installation via F12 (PXE 2.1) (Remote Boot from Server)	Allows a new or existing system to boot over the network and download software, including the operating system.
ROM revision levels	Reports the system BIOS revision level in Computer Configuration Utility (F10 Setup). Version is available through an industry standard interface (SMBIOS and WMI) so that management SW applications can use and report this information.
System board revision level	Allows management SW to read revision level of the system board. Revision level is digitally encoded into the HW and cannot be modified.
Start-up Diagnostics (Power-on Self-Test)	Assesses system health at boot time with selectable levels of testing.
Auto Setup when new hardware installed	System automatically detects addition of new hardware.
Keyboard-less Operation	The system can be booted without a keyboard.
Localized ROM Setup	Common BIOS image supports System Configuration Utility (F10 Setup) menus in 15 languages with local keyboard mappings.
Asset Tag	The user or MIS to set a unique tag string in non-volatile memory.
Per-slot Control	Allows I/O slot parameters (option ROM enable/disable, bifurcation, speed) to be configured individually.
Adaptive Cooling	Control parameters are set according to detected hardware configuration for optimal acoustics.
Pre-boot Diagnostics	(Pre-video) critical errors are reported via beeps and blinks on the power LED.
UEFI Specification Revision	2.7
ACPI	Advanced Configuration and Power Management Interface, Version 6.0
CD Boot	"El Torito" Bootable CD-ROM Format Specification Version 1.0
EHCI	Enhanced Host Controller Interface for Universal Serial Bus, Revision 1.0
PCI Express	PCI Express Base Specification, Revision 2.0 PCI Express Base Specification, Revision 3.0 PCI Express Base Specification, Revision 4.0 PCI Express Base Specification, Revision 5.0
SATA	Serial ATA Specification, Revision 1.0a Serial ATA 3 Gb/s: Serial ATA Specification, Revision 2.5 Serial ATA 6 Gb/s: Serial ATA Specification, Revision 3.0
SPD	JEDEC JESD300-5
TPM	Trusted Computing Group TPM Specification Version 2.0 (Infineon SLB 9672). Common Criteria EAL4+ certified. FIPS 140-2 Certification TCG TPM Certified products list: http://www.trustedcomputinggroup.org/certification/tpm-certified-products/
UHCI	Universal Host Controller Interface Design Guide, Revision 1.1
USB	Universal Serial Bus Revision 1.1 Specification Universal Serial Bus Revision 2.0 Specification Universal Serial Bus Revision 3.1 Specification Universal Serial Bus Revision 3.2 Specification USB Battery Charging specification, Revision 1.2 USB Power Delivery specification Revision 3.0
SMBIOS	System Management BIOS Reference Specification, Version 3.2

Social and Environmental Responsibility

Eco-Label Certifications & Declarations

This product is low halogen except for HP Z Turbo Quad Pro PCIe TLC SSD, CRU QX428 removable storage frames, ConnectX-6 DX Amphenol 10 & 25 Gb Transceivers, power cords, cables, and peripherals. Service parts obtained after purchase may not be Low Halogen.

This product has received or is in the process of being certified to the following approvals and may be labeled with one or more of these marks:

- IT ECO declaration
- ENERGY STAR® (energy-saving features available on selected configurations-Windows only)
- US Federal Energy Management Program (FEMP)
- EPEAT[] Gold registered worldwide
- TCO Certified
- China Energy Conservation Program (CECP)
- China State Environmental Protection Administration (SEPA)
- Taiwan Green Mark
- Korea Eco-label
- Japan PC Green label*

Sustainable Impact Specifications

- Product Carbon Footprint (hp.com)
- Ocean-bound plastic in System fan, CPU fan
- 40% post-consumer recycled plastic
- 10% recycled metal
- Low halogen
- Outside Box and corrugated cushions are 100% sustainably sourced and recyclable
- Recycled Plastic cushions

System Configuration

The configuration used for the Energy Consumption and Declared Noise Emissions data is based on a "Typically Configured Desktop Workstation".

Energy Consumption (in accordance with US ENERGY STAR® test method)	115VAC, 60Hz	230VAC, 50Hz	100VAC, 50Hz
Normal Operation (Sort idle)	187.49 W	191.59 W	197.06 W
Normal Operation (Long idle)	184.27 W	187.92 W	184.67 W
Sleep	14.66 W	13.58 W	14.57 W
Off	2.49 W	2.63 W	2.49 W

NOTE:
Energy efficiency data listed is for an ENERGY STAR® compliant product if offered within the model family . HP computers marked with the ENERGY STAR® Logo are compliant with the applicable U.S. Environmental Protection Agency (EPA) ENERGY STAR® specifications for computers. If a model family does not offer ENERGY STAR® compliant configurations, then energy efficiency data listed is for a typically configured PC featuring a hard disk drive, a high efficiency power supply, and a Microsoft Windows® operating system.

Heat Dissipation*	115VAC, 60Hz	230VAC, 50Hz	100VAC, 50Hz
Normal Operation (Short idle)	641.2 BTU/hr	655.2 BTU/hr	673.9 BTU/hr
Normal Operation (Long idle)	630.2 BTU/hr	642.7 BTU/hr	631.6 BTU/hr
Sleep	50.1 BTU/hr	46.4 BTU/hr	49.8 BTU/hr
Off	8.5 BTU/hr	9.0 BTU/hr	8.5 BTU/hr

***NOTE:** Heat dissipation is calculated based on the measured watts, assuming the service level is attained for one hour.

Declared Noise Emissions (in accordance with ISO 7779 and ISO 9296)	Sound Power (L_{WAd}, bels)	Sound Pressure (L_{pAm}, decibels)
Typically Configured – Idle	3.8	19
Drive Random Seek	3.9	20
Active Mode	3.8	19

Longevity and Upgrading

This product can be upgraded, possibly extending its useful life by several years. Upgradeable features and/or components contained in the

Spare parts are available throughout the warranty period and or for up to "5" years after the end of production.

Additional Information

- This product is in compliance with the Restrictions of Hazardous Substances (RoHS) directive - 2011/65/EC.
- This HP product is designed to comply with the Waste Electrical and Electronic Equipment (WEEE) Directive – 2002/96/EC.
- This product is in compliance with California Proposition 65 (State of California; Safe Drinking Water and Toxic Enforcement Act of 1986).
- This product is in compliance with the IEEE 1680 (EPEAT) standard at the Gold level, see www.epeat.net
- Plastics parts weighing over 25 grams used in the product are marked per ISO11469 and ISO1043.
- This product is 95.1% recycle-able when properly disposed of at end of life.

Packaging Materials

External:	PAPER/Corrugated	2000 g
	PAPER/Corrugated	70 g
Internal:	PLASTIC/Polyethylene low density - LDPE	46 g
	PLASTIC/Polyethylene Expanded - EPE	450 g

The plastic packaging material contains at least 95.1% recycled content.

The corrugated paper packaging materials contains at least 35.0% recycled content.

RoHS Compliance

HP Inc. complies fully with materials regulations. We were among the first companies to extend the restrictions in the European Union (EU) Restriction of Hazardous Substances (RoHS) Directive to our products worldwide through the HP GSE. HP has contributed to the development of related legislation in Europe, as well as China, India, and Vietnam.

We believe the RoHS directive and similar laws play an important role in promoting industry-wide elimination of substances of concern. We have supported the inclusion of additional substances—including PVC, BFRs, and certain phthalates—in future RoHS legislation that pertains to electrical and electronics products.

We met our voluntary objective to achieve worldwide compliance with the new EU RoHS requirements for virtually all relevant products by July 2013, and we will continue to extend the scope of the commitment to include further restricted substances as regulations continue to evolve.

To obtain a copy of the HP RoHS Compliance Statement, see HP RoHS position statement.

Material Usage

This product does not contain any of the following substances in excess of regulatory limits (refer to the HP General Specification for the Environment at http://www.hp.com/hpinfo/globalcitizenship/environment/supplychain/gen_specifications.html):

- Asbestos
- Certain Azo Colorants
- Certain Brominated Flame Retardants – may not be used as flame retardants in plastics
- Cadmium
- Chlorinated Hydrocarbons
- Chlorinated Paraffins
- Bis(2-Ethylhexyl) phthalate (DEHP)
- Benzyl butyl phthalate (BBP)
- Dibutyl phthalate (DBP)
- Diisobutyl phthalate (DIBP)
- Formaldehyde
- Halogenated Diphenyl Methanes
- Lead carbonates and sulfates
- Lead and Lead compounds
- Mercuric Oxide Batteries
- Nickel – finishes must not be used on the external surface designed to be frequently handled or carried by the user.
- Ozone Depleting Substances
- Polybrominated Biphenyls (PBBs)
- Polybrominated Biphenyl Ethers (PBBEs)
- Polybrominated Biphenyl Oxides (PBBOs)
- Polychlorinated Biphenyl (PCB)
- Polychlorinated Terphenyls (PCT)
- Polyvinyl Chloride (PVC) – except for wires and cables, and certain retail packaging has been voluntarily removed from most applications.
- Radioactive Substances
- Tributyl Tin (TBT), Triphenyl Tin (TPT), Tributyl Tin Oxide (TBTO)

Packaging Usage

HP follows these guidelines to decrease the environmental impact of product packaging:

- Eliminate the use of heavy metals such as lead, chromium, mercury and cadmium in packaging materials.
- Eliminate the use of ozone-depleting substances (ODS) in packaging materials.
- Design packaging materials for ease of disassembly.
- Maximize the use of post-consumer recycled content materials in packaging materials.
- Use readily recyclable packaging materials such as paper and corrugated materials.
- Reduce size and weight of packages to improve transportation fuel efficiency.
- Plastic packaging materials are marked according to ISO 11469 and DIN 6120 standards.

End-of-life Management and Recycling

HP offers end-of-life HP product return and recycling programs in many geographic areas. To recycle your product, please go to: http://www.hp.com/go/reuse-recycle or contact your nearest HP sales office. Products returned to HP will be recycled, recovered or disposed of in a responsible manner.

The EU WEEE directive (2002/95/EC) requires manufacturers to provide treatment information for each product type for use by treatment facilities. This information (product disassembly instructions) is posted on the Hewlett Packard web site at: http://www.hp.com/go/recyclers.

These instructions may be used by recyclers and other WEEE treatment facilities as well as HP OEM customers who integrate and re-sell HP equipment.

HP, Inc. Corporate Environmental Information

For more information about HP's commitment to the environment:

Global Citizenship Report
http://www.hp.com/hpinfo/globalcitizenship/gcreport/index.html
Eco-label certifications
http://www8.hp.com/us/en/hp-information/environment/ecolabels.html
ISO 14001 certificates:
http://h20195.www2.hp.com/V2/GetDocument.aspx?docname=c04755842
and
http://www.hp.com/hpinfo/globalcitizenship/environment/pdf/cert.pdf

footnotes

- Percentage of ocean-bound plastic contained in each component varies by product
- Recycled plastic content percentage is based on the definition set in the IEEE 1680.1-2018 standard.
- External power supplies, WWAN modules, power cords, cables and peripherals excluded.
- 100% outer box packaging and corrugated cushions made from sustainably sourced certified and recycled fibers.
- Fiber cushions made from 100% recycled wood fiber and organic materials.
- Plastic cushions are made from >90% recycled plastic.
- Recycled metal is expressed as a percentage of the total weight of the metal according to ISO 14021 definitions for metal parts over 25 grams.

Manageability

Industry Standard Specifications

This product meets the following industry standard specifications for manageability functionality:

- DASH 1.1 (via Intel® LAN on motherboard)

Intel® Active Management Technology (AMT)

Intel® Active Management Technology (AMT) 15.20

An advanced set of remote management features and functionality providing IT administrators the latest and most effective tools to remotely discover, heal, and protect networked client systems regardless of the system's health or power state. AMT 15.20 includes the following advanced management functions:

- Power Management (on, off, reset, graceful shutdown, sleep and hibernate)
  - Support in Max Power Savings (Shutdown and Hibernate Modes)
- Hardware Inventory (includes BIOS and firmware revisions)
- Hardware Alerting
- Agent Presence
- System Defense Filters
- Serial Over LAN (SOL)
- USB Redirect (Media Redirection)
- ME Wake-on-LAN (WOL), even with Maximum Power Savings Enabled
- DASH 1.2 compliance
- IPv6 Support
- Fast Call for Help - a client inside or outside the firewall may initiate a call for help via BIOS screen, periodic connections, or alert triggered connection
- Remote Scheduled Maintenance - pre-schedule when the system connects to the IT or service provider console for maintenance.
- Remote Alerts - automatically alert IT or service provider if issues arise
- Access Monitor - Provides oversight into Intel® AMT actions to support security requirements

- PC Alarm Clock
- Microsoft NAP Support
- Host Base set-up and configuration
- Management Engine (ME) firmware roll back
- Local Time Sync to UTC
- Remote Memory Dump Command – Creates memory dump for debug

Intel® vPro™ Technology Yes, when configured with an Intel® vPro™ supporting processor.

Stable & Consistent Offerings

Global Series SKUs As part of its commitment to hardware, software, and solution innovation, HP is proud to introduce this breakthrough platform configuration stability to HP Workstation customers. HP Stable & Consistent Offerings are built on the foundation of a carefully chosen set of hardware and software designed and tested to work with all HP Z Workstation platforms through their end of life. These components and their corresponding HP Workstation platform compatibility are outlined in this section.

Stable & Consistent Offerings HP Stable & Consistent Offerings are available worldwide to all HP Workstation customers-no special programs, no additional cost-no kidding. Simply select your hardware and software components when you customize your HP Workstation and be assured that you'll be able to buy that same configuration throughout the lifecycle of the product.

	Product #	Offering
Processors	3F4D7AV	Intel Xeon 5415+
	3F4D3AV	Intel Xeon 4410Y

	Product #	Offering
Graphics	6Z325AV	NVIDIA Long-Life T1000E
	6Z319AV	NVIDIA Long-Life RTX A2000E
	6Z321AV	NVIDIA Long-Life RTX A4000E
	6B4J4AV	AMD Radeon RX 6400
	3F2W5AV	AMD Radeon Pro 6600

	Product #	Offering
Storage	3F3A6AV	Z Turbo 1TB PCIe-4x4 2280 TLC M.2 Solid State Drive
	3F4E6AV	1TB 7200RPM SATA 3.5in Enterprise

STORAGE/HARD DRIVES

Performance PCIe SSDs for HP Workstations	**Z Turbo 512GB 2280 PCIe-4x4 TLC SSD**	**Capacity**	512GB
		Protocol	PCIe
		Form Factor	M.2
		Controller	NVMe
		NAND Type	3D TLC
		Endurance	300TBW (TB Written)
		Reliability	1.5M hours
		Rated for 24/7/365 operation	No
		Interface	PCI Express 4.0 x4 electrical
		Operating Temperature	32° to 158° F (0° to 70° C)
		Performance	**Sequential Read** up to 6400MB/s*
			Sequential Write up to 3400MB/s*
			Random Read up to 600K IOPS*
			Random Write up to 600K IOPS*

*Actual performance may vary.
NOTE: For storage drives, GB = 1 billion bytes. TB = 1 trillion bytes. Actual formatted capacity is less. Up to 36GB of system disk (for Windows) is reserved for system recovery software.

Z Turbo 512GB 2280 PCIe-4x4 SED OPAL2 TLC M.2 SSD	**Capacity**	512GB
	Protocol	PCIe
	Form Factor	M.2
	Controller	NVMe
	NAND Type	3D TLC
	Endurance	300TBW (TB Written)
	Reliability	1.5M hours
	Rated for 24/7/365 operation	No
	Interface	PCI Express 4.0 x4 electrical
	Operating Temperature	32° to 158° F (0° to 70° C)
	Performance	**Sequential Read** up to 6400MB/s*
		Sequential Write up to 3400MB/s*
		Random Read up to 600K IOPS*
		Random Write up to 600K IOPS*
	Self-Encrypting Drive Support	OPAL 2

*Actual performance may vary.
NOTE: For storage drives, GB = 1 billion bytes. TB = 1 trillion bytes. Actual formatted capacity is less. Up to 36GB of system disk (for Windows) is reserved for system recovery software.

Z Turbo 1TB 2280 PCIe-4x4 SED OPAL2 TLC M.2 SSD	**Capacity**	1TB
	Protocol	PCIe
	Form Factor	M.2
	Controller	NVMe
	NAND Type	3D TLC
	Endurance	400TBW (TB Written)
	Reliability	1.5M hours

	Rated for 24/7/365 operation	No
	Interface	PCI Express 4.0 x4 electrical
	Operating Temperature	32° to 158° F (0° to 70° C)
	Performance	**Sequential Read** up to 6500MB/s*
		Sequential Write up to 5000MB/s*
		Random Read up to 800K IOPS*
		Random Write up to 800K IOPS*
	Self-Encrypting Drive Support	OPAL 2

*Actual performance may vary.
NOTE: For storage drives, GB = 1 billion bytes. TB = 1 trillion bytes. Actual formatted capacity is less. Up to 36GB of system disk (for Windows) is reserved for system recovery software.

Z Turbo 1TB 2280 PCIe-4x4 TLC SSD	**Capacity**	1TB
	Protocol	PCIe
	Form Factor	M.2
	Controller	NVMe
	NAND Type	3D TLC
	Endurance	400TBW (TB Written)
	Reliability	1.5M hours
	Rated for 24/7/365 operation	No
	Interface	PCI Express 4.0 x4 electrical
	Operating Temperature	32° to 158° F (0° to 70° C)
	Performance	**Sequential Read** up to 6500MB/s*
		Sequential Write up to 5000MB/s*
		Random Read up to 800K IOPS*
		Random Write up to 800K IOPS*

*Actual performance may vary.
NOTE: For storage drives, GB = 1 billion bytes. TB = 1 trillion bytes. Actual formatted capacity is less. Up to 36GB of system disk (for Windows) is reserved for system recovery software.

Z Turbo 1TB 2280 PCIe-4x4 TLC SSD	**Capacity**	1TB
	Protocol	PCIe
	Form Factor	M.2
	Controller	NVMe
	NAND Type	3D TLC
	Endurance	400TBW (TB Written)
	Reliability	1.5M hours
	Rated for 24/7/365 operation	No
	Interface	PCI Express 4.0 x4 electrical
	Operating Temperature	32° to 158° F (0° to 70° C)
	Performance	**Sequential Read** up to 6500MB/s*
		Sequential Write up to 5000MB/s*
		Random Read up to 800K IOPS*
		Random Write up to 800K IOPS*

Technical Specifications - Storage Drives

*Actual performance may vary.
NOTE: For storage drives, GB = 1 billion bytes. TB = 1 trillion bytes. Actual formatted capacity is less. Up to 36GB of system disk (for Windows) is reserved for system recovery software.

Z Turbo 2TB 2280 PCIe-4x4 SED OPAL2 TLC M.2 SSD	**Capacity**	2TB	
	Protocol	PCIe	
	Form Factor	M.2	
	Controller	NVMe	
	NAND Type	3D TLC	
	Endurance	500TBW (TB Written)	
	Reliability	1.5M hours	
	Rated for 24/7/365 operation	No	
	Interface	PCI Express 4.0 x4 electrical	
	Operating Temperature	32° to 158° F (0° to 70° C)	
	Performance	**Sequential Read**	up to 6500MB/s*
		Sequential Write	up to 5000MB/s*
		Random Read	up to 800K IOPS*
		Random Write	up to 800K IOPS*
	Self-Encrypting Drive Support	OPAL 2	

*Actual performance may vary.
NOTE: For storage drives, GB = 1 billion bytes. TB = 1 trillion bytes. Actual formatted capacity is less. Up to 36GB of system disk (for Windows) is reserved for system recovery software.

Z Turbo 2TB 2280 PCIe-4x4 TLC SSD	**Capacity**	2TB	
	Protocol	PCIe	
	Form Factor	M.2	
	Controller	NVMe	
	NAND Type	3D TLC	
	Endurance	500TBW (TB Written)	
	Reliability	1.5M hours	
	Rated for 24/7/365 operation	No	
	Interface	PCI Express 4.0 x4 electrical	
	Operating Temperature	32° to 158° F (0° to 70° C)	
	Performance	**Sequential Read**	up to 6500MB/s*
		Sequential Write	up to 5000MB/s*
		Random Read	up to 800K IOPS*
		Random Write	up to 800K IOPS*

*Actual performance may vary.
NOTE: For storage drives, GB = 1 billion bytes. TB = 1 trillion bytes. Actual formatted capacity is less. Up to 36GB of system disk (for Windows) is reserved for system recovery software.

Z Turbo 4TB 2280 PCIe-4x4 TLC M.2 SSD	**Capacity**	4TB	
	Protocol	PCIe	
	Form Factor	M.2	
	Controller	NVMe	
	NAND Type	3D TLC	

Technical Specifications - Storage Drives

	Endurance	600TBW (TB Written)	
	Reliability	1.5M hours	
	Rated for 24/7/365 operation	No	
	Interface	PCI Express 4.0 x4 electrical	
	Operating Temperature	32° to 158° F (0° to 70° C)	
	Performance	**Sequential Read**	up to 6500MB/s*
		Sequential Write	up to 5000MB/s*
		Random Read	up to 700K IOPS*
		Random Write	up to 700K IOPS*

*Actual performance may vary.
NOTE: For storage drives, GB = 1 billion bytes. TB = 1 trillion bytes. Actual formatted capacity is less. Up to 36GB of system disk (for Windows) is reserved for system recovery software.

Z Turbo 4TB 2280 PCIe-4x4 SED OPAL2 TLC M.2 SSD	**Capacity**	4TB	
	Protocol	PCIe	
	Form Factor	M.2	
	Controller	NVMe	
	NAND Type	3D TLC	
	Endurance	600TBW (TB Written)	
	Reliability	1.5M hours	
	Rated for 24/7/365 operation	No	
	Interface	PCI Express 4.0 x4 electrical	
	Operating Temperature	32° to 158° F (0° to 70° C)	
	Performance	**Sequential Read**	up to 6500MB/s*
		Sequential Write	up to 5000MB/s*
		Random Read	up to 700K IOPS*
		Random Write	up to 700K IOPS*
	Self-Encrypting Drive Support	OPAL 2	

*Actual performance may vary.
NOTE: For storage drives, GB = 1 billion bytes. TB = 1 trillion bytes. Actual formatted capacity is less. Up to 36GB of system disk (for Windows) is reserved for system recovery software.

Performance PCIe SSDs for HP Dual Pro Carrier	**HP Z Turbo Drive Dual Pro 512GB SSD**	**Capacity**	512GB
		Protocol	PCIe
		Form Factor	M.2
		Controller	NVMe
		NAND Type	3D TLC
		Endurance	300TBW (TB Written)
		Reliability	1.5M hours
		Rated for 24/7/365 operation	No
		Interface	PCI Express 4.0 x4 electrical
		Operating Temperature	32° to 158° F (0° to 70° C)
		Performance	**Sequential Read** up to 6400MB/s*

	Sequential Write	up to 3400MB/s*
	Random Read	up to 600K IOPS*
	Random Write	up to 600K IOPS*

*Actual performance may vary.
NOTE: For storage drives, GB = 1 billion bytes. TB = 1 trillion bytes. Actual formatted capacity is less. Up to 36GB of system disk (for Windows) is reserved for system recovery software.

HP Z Turbo Drive Dual Pro 1TB SSD	**Capacity**	1TB	
	Protocol	PCIe	
	Form Factor	M.2	
	Controller	NVMe	
	NAND Type	3D TLC	
	Endurance	400TBW (TB Written)	
	Reliability	1.5M hours	
	Rated for 24/7/365 operation	No	
	Interface	PCI Express 4.0 x4 electrical	
	Operating Temperature	32° to 158° F (0° to 70° C)	
	Performance	**Sequential Read**	up to 6500MB/s*
		Sequential Write	up to 5000MB/s*
		Random Read	up to 800K IOPS*
		Random Write	up to 800K IOPS*

*Actual performance may vary.
NOTE: For storage drives, GB = 1 billion bytes. TB = 1 trillion bytes. Actual formatted capacity is less. Up to 36GB of system disk (for Windows) is reserved for system recovery software.

HP Z Turbo Drive Dual Pro 2TB SSD	**Capacity**	2TB	
	Protocol	PCIe	
	Form Factor	M.2	
	Controller	NVMe	
	NAND Type	3D TLC	
	Endurance	500TBW (TB Written)	
	Reliability	1.5M hours	
	Rated for 24/7/365 operation	No	
	Interface	PCI Express 4.0 x4 electrical	
	Operating Temperature	32° to 158° F (0° to 70° C)	
	Performance	**Sequential Read**	up to 6500MB/s*
		Sequential Write	up to 5000MB/s*
		Random Read	up to 800K IOPS*
		Random Write	up to 800K IOPS*

*Actual performance may vary.
NOTE: For storage drives, GB = 1 billion bytes. TB = 1 trillion bytes. Actual formatted capacity is less. Up to 36GB of system disk (for Windows) is reserved for system recovery software.

HP Z Turbo Drive Dual Pro 4TB SSD	**Capacity**	4TB	
	Protocol	PCIe	
	Form Factor	M.2	
	Controller	NVMe	

	NAND Type	3D TLC	
	Endurance	500TBW (TB Written)	
	Reliability	1.5M hours	
	Rated for 24/7/365 operation	No	
	Interface	PCI Express 4.0 x4 electrical	
	Operating Temperature	32° to 158° F (0° to 70° C)	
	Performance	**Sequential Read**	up to 6500MB/s*
		Sequential Write	up to 5000MB/s*
		Random Read	up to 800K IOPS*
		Random Write	up to 800K IOPS*

*Actual performance may vary.
NOTE: For storage drives, GB = 1 billion bytes. TB = 1 trillion bytes. Actual formatted capacity is less. Up to 36GB of system disk (for Windows) is reserved for system recovery software.

SATA Hard Drives for HP Workstations	**1TB 7200RPM SATA 3.5in Enterprise HDD**	**Capacity**	1TB
		Protocol	SATA
		Form Factor	3.5"
		Controller	AHCI
		Reliability	2.0M hours
		Rated Power On Hours	8760/yr
		Annualized Failure Rate (based on Rated POH)	<0.62%
		Rated for 24/7/365 operation	YES
		Height	1 in; 2.54 cm
		Width	**Media Diameter** 3.5 in; 8.9 cm
			Physical Size 4 in; 10.17 cm
		Interface	Serial ATA (6.0Gb/s), NCQ enabled
		Synchronous Transfer Rate (Maximum)	Up to 600MB/s *
		Buffer	128MB
		Cache	Adaptive
		Seek Time (typical reads, includes controller overhead, including settling)	**Single Track** 0.32 ms *
			Average 7.45 ms *
			Full Stroke 14.2 ms *
		Rotational Speed	7,200 rpm
		Logical Blocks	1,953,525,168
		Operating Temperature	41° to 131° F (5° to 55° C)
		Performance	**Sequential Read** up to 226MB/s*
			Sequential Write up to 226MB/s*

*Actual performance may vary.
NOTE: For storage drives, GB = 1 billion bytes. TB = 1 trillion bytes. Actual formatted capacity is less. Up to 36GB of system disk (for Windows) is reserved for system recovery software.

2TB 7200RPM SATA 3.5in Enterprise HDD	**Capacity**	2TB
	Protocol	SATA

	Form Factor	3.5"	
	Controller	AHCI	
	Reliability	2.0M hours	
	Rated Power On Hours	8760/yr	
	Annualized Failure Rate (based on Rated POH)	<0.62%	
	Rated for 24/7/365 operation	YES	
	Height	1 in; 2.54 cm	
	Width	**Media Diameter**	3.5 in; 8.9 cm
		Physical Size	4 in; 10.17 cm
	Interface	Serial ATA (6.0Gb/s), NCQ enabled	
	Synchronous Transfer Rate (Maximum)	Up to 600MB/s *	
	Buffer	128MB	
	Cache	Adaptive	
	Seek Time (typical reads, includes controller overhead, including settling)	**Single Track**	0.7 ms *
		Average	8.5 ms *
		Full Stroke	15.7 ms *
	Rotational Speed	7,200 rpm	
	Logical Blocks	3,907,029,168	
	Operating Temperature	41° to 131° F (5° to 55° C)	
	Performance	**Sequential Read**	up to 226MB/s*
		Sequential Write	up to 226MB/s*

*Actual performance may vary.
NOTE: For storage drives, GB = 1 billion bytes. TB = 1 trillion bytes. Actual formatted capacity is less. Up to 36GB of system disk (for Windows) is reserved for system recovery software.

4TB 7200 RPM SATA 3.5in Enterprise HDD	**Capacity**	4TB	
	Protocol	SATA	
	Form Factor	3.5"	
	Controller	AHCI	
	Reliability	2.0M hours	
	Rated Power On Hours	8760/yr	
	Annualized Failure Rate (based on Rated POH)	<0.62%	
	Rated for 24/7/365 operation	YES	
	Height	1 in; 2.54 cm	
	Width	**Media Diameter**	3.5 in; 8.9 cm
		Physical Size	4 in; 10.17 cm
	Interface	Serial ATA (6.0Gb/s), NCQ enabled	
	Synchronous Transfer Rate (Maximum)	Up to 600MB/s *	
	Buffer	256MB	
	Cache	Adaptive	
		Single Track	0.7 ms *

	Seek Time (typical reads, includes controller overhead, including settling)	**Average**	8.5 ms *
		Full Stroke	15.7 ms *
	Rotational Speed	7,200 rpm	
	Logical Blocks	7,814,037,168	
	Operating Temperature	41° to 131° F (5° to 55° C)	
	Performance	**Sequential Read**	up to 226MB/s*
		Sequential Write	up to 226MB/s*

*Actual performance may vary.
NOTE: For storage drives, GB = 1 billion bytes. TB = 1 trillion bytes. Actual formatted capacity is less. Up to 36GB of system disk (for Windows) is reserved for system recovery software.

8TB 7200RPM SATA 3.5in Enterprise HDD	**Capacity**	8TB	
	Protocol	SATA	
	Form Factor	3.5"	
	Controller	AHCI	
	Reliability	2.0M hours	
	Rated Power On Hours	8760/yr	
	Annualized Failure Rate (based on Rated POH)	<0.62%	
	Rated for 24/7/365 operation	YES	
	Height	1 in; 2.54 cm	
	Width	**Media Diameter**	3.5 in; 8.9 cm
		Physical Size	4 in; 10.17 cm
	Interface	Serial ATA (6.0Gb/s), NCQ enabled	
	Synchronous Transfer Rate (Maximum)	Up to 600MB/s *	
	Buffer	256MB	
	Cache	Adaptive	
	Seek Time (typical reads, includes controller overhead, including settling)	**Single Track**	0.7 ms *
		Average	8.5 ms *
		Full Stroke	15.7 ms *
	Rotational Speed	7,200 rpm	
	Logical Blocks	15,628,053,168	
	Operating Temperature	41° to 140° F (5° to 60° C)	
	Performance	**Sequential Read**	up to 226MB/s*
		Sequential Write	up to 226MB/s*

*Actual performance may vary.
NOTE: For storage drives, GB = 1 billion bytes. TB = 1 trillion bytes. Actual formatted capacity is less. Up to 36GB of system disk (for Windows) is reserved for system recovery software.

12TB 7200 RPM SATA-6G 3.5in Enterprise HDD	**Capacity**	12TB
	Protocol	SATA
	Form Factor	3.5"
	Controller	AHCI
	Reliability	2.0M hours

Technical Specifications - Storage Drives

Rated Power On Hours	8760/yr	
Annualized Failure Rate (based on Rated POH)	<0.62%	
Rated for 24/7/365 operation	YES	
Height	1 in; 2.54 cm	
Width	**Media Diameter**	3.5 in; 8.9 cm
	Physical Size	4 in; 10.17 cm
Interface	Serial ATA (6.0Gb/s), NCQ enabled	
Synchronous Transfer Rate (Maximum)	Up to 600MB/s *	
Buffer	256MB	
Cache	Adaptive	
Seek Time (typical reads, includes controller overhead, including settling)	**Single Track**	0.7 ms *
	Average	8.5 ms *
	Full Stroke	15.7 ms *
Rotational Speed	7,200 rpm	
Logical Blocks	23,437,770,752	
Operating Temperature	41° to 140° F (5° to 60° C)	
Performance	**Sequential Read**	up to 226MB/s*
	Sequential Write	up to 226MB/s*

*Actual performance may vary.
NOTE: For storage drives, GB = 1 billion bytes. TB = 1 trillion bytes. Actual formatted capacity is less. Up to 36GB of system disk (for Windows) is reserved for system recovery software.

Technical Specifications - Graphics

GRAPHICS

NVIDIA® RTX™ 6000 Ada 48GB	**Form Factor**	Full-Height Dual Slot (4.4" Height x 10.5" Length) Weight: 1230 grams / 2.71 lbs (with extender)
	Max Power Consumption	Power: 300 Watts Cooling: Active
	GPU Memory	48GB GDDR6 memory ECC Memory Bandwidth: Up to 960 GB/s Memory Width: 384 bits
	Connectors	4x DisplayPort 1.4a Quadro Sync II connector Stereo Sync Requires CEM 5.0 16-pin auxiliary power adapter
	Maximum Resolution	7680x4320 @ 120Hz
	Bus Type	PCI Express 4.0 x16
	Available Graphics Drivers	Windows 11 Windows 10 Linux® 64-bit
NVIDIA® RTX™ A6000 48GB	**Form Factor**	Full-Height Dual Slot (4.4" Height x 10.5" Length) Weight: 1230 grams / 2.71 lbs (with extender)
	Max Power Consumption	Power: 300 Watts Cooling: Active
	GPU Memory	48GB GDDR6 memory ECC optional Memory Bandwidth: Up to 768 GB/s Memory Width: 384 bit
	Connectors	4x DisplayPort 1.4a Quadro Sync II connector NVLink® Stereo Sync Requires 8-pin auxiliary power
	Maximum Resolution	7680x4320 @ 120Hz
	Bus Type	PCI Express 4.0 x16
	Available Graphics Drivers	Windows 11 Windows 10 Linux® 64-bit
NVIDIA® RTX™ A5000 24GB	**Form Factor**	Full-Height Dual Slot (4.4" Height x 10.5" Length) Weight: 1049 grams + 80 grams extender
	Max Power Consumption	Power: 230W Cooling: Active
	GPU Memory	24GB GDDR6 memory ECC optional Memory Bandwidth: Up to 768 GB/s Memory Width: 384 bit
	Connectors	4x DisplayPort 1.4a Quadro Sync II connector NVLink®

Technical Specifications - Graphics

		Stereo Sync Requires 8-pin auxiliary power
	Maximum Resolution	7680x4320 @ 120Hz
	Bus Type	PCI Express 4.0 x16
	Available Graphics Drivers	Windows 11 Windows 10 Linux® 64-bit
NVIDIA® RTX A4500 20GB	**Form Factor**	Full-Height Dual Slot (4.4" Height x 10.5" Length) Weight: 1049 grams + 80 grams extender
	Max Power Consumption	Power: 200W Cooling: Active
	GPU Memory	20GB GDDR6 memory Memory Bandwidth: Up to 640 GB/s Memory Width: 320 bit
	Connectors	4x DisplayPort 1.4a Quadro Sync II connector NVLink® Stereo Sync Requires 8-pin auxiliary power
	Maximum Resolution	7680x4320 @ 120Hz
	Bus Type	PCI Express 4.0 x16
	Available Graphics Drivers	Windows 11 Windows 10 Linux® 64-bit
NVIDIA® RTX A4000 16GB	**Form Factor**	Full-Height Single Slot (4.4" Height x 9.5" Length) Weight: 500 grams
	Max Power Consumption	Power: 140W Cooling: Active
	GPU Memory	16GB GDDR6 memory Memory Bandwidth: Up to 448 GB/s Memory Width: 256 bit
	Connectors	4x DisplayPort 1.4a Quadro Sync II connector Stereo Sync Requires 6-pin auxiliary power
	Maximum Resolution	7680x4320 @ 120Hz
	Bus Type	PCI Express 4.0 x16
	Available Graphics Drivers	Windows 11 Windows 10 Linux® 64-bit
NVIDIA® Long-Life RTX A4000E 16GB	**Form Factor**	Full-Height Single Slot (4.4" Height x 9.5" Length) Weight: 500 grams
	Max Power Consumption	Power: 140W Cooling: Active

Technical Specifications - Graphics

	GPU Memory	16GB GDDR6 memory Memory Bandwidth: Up to 448 GB/s Memory Width: 256 bit
	Connectors	4x DisplayPort 1.4a Quadro Sync II connector Stereo Sync Requires 6-pin auxiliary power
	Maximum Resolution	7680x4320 @ 120Hz
	Bus Type	PCI Express 4.0 x16
	Available Graphics Drivers	Windows 11 Windows 10 Linux® 64-bit
NVIDIA® RTX A2000 12GB	**Form Factor**	Half-Height Dual Slot (2.713" Height x 6.6" Length) Weight: 306 grams
	Max Power Consumption	Power: 70W Cooling: Active
	GPU Memory	12GB GDDR6 memory Memory Bandwidth: Up to 288 GB/s Memory Width: 192 bit
	Connectors	4x mini-DisplayPort 1.4a
	Maximum Resolution	7680x4320 @ 120Hz
	Bus Type	PCI Express 4.0 x16
	Available Graphics Drivers	Windows 11 Windows 10 Linux® 64-bit
NVIDIA® Long-Life RTX A2000E 12GB	**Form Factor**	Half-Height Dual Slot (2.713" Height x 6.6" Length) Weight: 306 grams
	Max Power Consumption	Power: 70W Cooling: Active
	GPU Memory	12GB GDDR6 memory Memory Bandwidth: Up to 288 GB/s Memory Width: 192 bit
	Connectors	4x mini-DisplayPort 1.4a
	Maximum Resolution	7680x4320 @ 120Hz
	Bus Type	PCI Express 4.0 x16
	Available Graphics Drivers	Windows 11 Windows 10 Linux® 64-bit
NVIDIA® T1000 8GB	**Form Factor**	Half-Height Single Slot (2.713" Height x 6.137" Length) Weight: 132.6 grams
	Max Power Consumption	Power: 50W Cooling: Active

Technical Specifications - Graphics

	GPU Memory	8GB GDDR6 memory Memory Bandwidth: Up to 160 GB/s Memory Width: 128 bit
	Connectors	4x mini-DisplayPort 1.4a
	Maximum Resolution	7680x4320 @ 120Hz
	Bus Type	PCI Express 3.0 x16
	Available Graphics Drivers	Windows 11 Windows 10 Linux® 64-bit
NVIDIA® Long-Life T1000E 8GB	**Form Factor**	Half-Height Single Slot (2.713" Height x 6.137" Length) Weight: 132.6 grams
	Max Power Consumption	Power: 50W Cooling: Active
	GPU Memory	8GB GDDR6 memory Memory Bandwidth: Up to 160 GB/s Memory Width: 128 bit
	Connectors	4x mini-DisplayPort 1.4a
	Maximum Resolution	7680x4320 @ 120Hz
	Bus Type	PCI Express 3.0 x16
	Available Graphics Drivers	Windows 11 Windows 10 Linux® 64-bit
NVIDIA® T1000 4GB	**Form Factor**	Half-Height Single Slot (2.713" Height x 6.137" Length) Weight: 132.6 grams
	Max Power Consumption	Power: 50W Cooling: Active
	GPU Memory	4GB GDDR6 memory Memory Bandwidth: Up to 160 GB/s Memory Width: 128 bit
	Connectors	4x mini-DisplayPort 1.4a
	Maximum Resolution	7680x4320 @ 120Hz
	Bus Type	PCI Express 3.0 x16
	Available Graphics Drivers	Windows 11 Windows 10 Linux® 64-bit
NVIDIA® T400 4GB	**Form Factor**	Half-Height Single Slot (2.713" Height x 6.137" Length) Weight: 123.5 grams
	Max Power Consumption	Power: 30W Cooling: Active
	GPU Memory	4GB GDDR6 memory Memory Bandwidth: Up to 80 GB/s Memory Width: 64 bit
	Connectors	3x mini-DisplayPort 1.4a

Technical Specifications - Graphics

	Maximum Resolution	7680x4320 @ 120Hz
	Bus Type	PCI Express 3.0 x16
	Available Graphics Drivers	Windows 11 Windows 10 Linux® 64-bit
AMD® Radeon™ Pro W6800 32GB	**Form Factor**	Full-Height Dual Slot (4.4" Height x 10.5" Length) Weight: 850 grams
	Max Power Consumption	Power: 261W Cooling: Active
	GPU Memory	32GB GDDR6 memory Memory Bandwidth: Up to 512 GB/s Memory Width: 256 bit
	Connectors	6x mini-DisplayPort 1.4 Requires 8-pin+6-pin auxiliary power
	Maximum Resolution	7680x4320 @ 60Hz
	Bus Type	PCI Express 4.0 x16
	Available Graphics Drivers	Windows 11 Windows 10 Linux® 64-bit
AMD® Radeon™ Pro W6600 8GB	**Form Factor**	Full-Height Single Slot (4.38" Height x 9.50" Length) Weight: 132.6 grams
	Max Power Consumption	Power: 122W Cooling: Active
	GPU Memory	8GB GDDR6 memory Memory Bandwidth: Up to 224 GB/s Memory Width: 128 bit
	Connectors	4x DisplayPort 1.4 Requires 6-pin auxiliary power
	Maximum Resolution	7680x4320 @ 60Hz
	Bus Type	PCI Express 4.0 x16 (x8 electrical)
	Available Graphics Drivers	Windows 11 Windows 10 Linux® 64-bit
AMD® Radeon™ RX 6400 4GB	**Form Factor**	Half-Height Single Slot (4.4" Height x 10.5" Length) Weight: 155 grams
	Max Power Consumption	Power: 50W Cooling: Active
	GPU Memory	4GB GDDR6 memory Memory Bandwidth: Memory Width:
	Connectors	1x DisplayPort 1.4a 1x HDMI
	Maximum Resolution	7680x4320 @ 60Hz
	Bus Type	PCI Express 4.0 x4

	Available Graphics Drivers	Windows 11 Windows 10 Linux® 64-bit
Intel® Arc Pro A40 6GB	**Form Factor**	Half-Height Single Slot (2.7" Height x 6.6" Length) Weight: 220 grams
	Max Power Consumption	Power: 50W Cooling: Active
	GPU Memory	6GB GDDR6 memory Memory Bandwidth: 192GB Memory Width: 96 bit
	Connectors	4x mini- DisplayPort 1.4
	Maximum Resolution	7680x4320 @ 60Hz
	Bus Type	PCI Express 4.0 x8
	Available Graphics Drivers	Windows 11 Windows 10

Notes for all graphics cards:

- Some graphics and GPU compute cards can consume a great deal of power, thus combinations of cards with other components may exceed a particular power supply's output capability.
- Some graphics and GPU compute cards require supplemental power cables.
- Not all chassis/PSU configurations have enough supplemental power cables of the correct type for all graphics configurations.

Refer to the Power Supply section within Overview for more information.

OPTICAL AND REMOVABLE STORAGE

HP 9.5mm Slim Blu-Ray Writer	**Description**	9.5mm height, tray-load	
	Mounting Orientation	Either horizontal or vertical	
	Interface Type	SATA/ATAPI	
	Dimensions (WxHxD)	128 x 9.5 x 127mm	
	Supported Media Types	BD-ROM BD-R BD-RE DVD+R DVD+RW DVD+R DL DVD-R DL DVD-R DVD-RW CD-R CD-RW	
	Disc Capacity	**DVD-ROM**	8.5 GB DL or 4.7 GB standard
		Blu-ray	25 GB (single-layer) 50 GB (dual-layer) 100/128 GB (BDXL)
		Full Stroke DVD	< 230 ms (seek)

	Full Stroke CD	< 220 ms (seek)
	Blu-ray	< 230 ms (seek) (Full Stroke Blu-ray)
	Startup Time	(Time to drive ready from tray loading) BD-ROM (SL/DL) 25S / 28S BD-R (SL/DL) 25S / 28S BD-RE (SL/DL) 25S / 28S DVD-ROM (SL/DL) 18S / 18S DVD-R (SL/DL) 25S / 25S DVD-RW 25S DVD+R (SL/DL) 25S / 25S DVD+RW 25S CD-ROM 15S
Maximum Data Transfer Rates	**CD ROM Read**	CD-ROM, CD-R Up to 24X CD-RW Up to 24X
	DVD ROM Read	DVD+RW Up to 8X DVD-RW Up to 8X DVD+R DL Up to 8X DVD-R DL Up to 8X DVD-ROM Up to 8X DVD-ROM DL Up to 8X DVD+R Up to 8X DVD-R Up to 8X
	Blu-ray	BD-ROM Up to 6X BD-ROM DL Up to 6X BD-R Up to 6X BD-R DL Up to 6X BD-R Up to 6X BD-RE SL/DL Up to 6X
Power	**Source**	SATA DC power receptacle
	DC Power Requirements	5 VDC ± 5%-100 mV ripple p-p
	DC Current	5 VDC -900 mA typical, 2000mA maximum
Operating Environmental (all conditions non-condensing)	**Temperature**	41° to 122° F (5° to 50° C)
	Relative Humidity	10% to 80%
	Maximum Wet Bulb Temperature	84° F (29° C)
Operating Systems Supported	Windows 11, Windows 10, Windows 7 Professional 64-bit, Red Hat® Enterprise Linux® (RHEL) 8, 9 Desktop/Workstation SUSE Linux® Enterprise Desktop 15 Ubuntu 20.04, 22.04 LTS No driver is required for this device. Native support is provided by the operating system.	
Kit Contents	9.5mm Slim BDXL Blu-Ray Writer, 5.25" ODD Bay adapter/carrier, slim SATA data/power cable, installation guide As Blu-ray is a new format containing new technologies, certain disc, digital connection, compatibility and/or performance issues may arise, and do not constitute defects in the product. Flawless playback on all systems is not guaranteed. In order for some Blu-ray titles to play, they may	

			require a DVI or HDMI digital connection and your display may require HDCP support. HD-DVD movies cannot be played on this workstation.

NOTE: HD-DVD disks cannot be played on the DVD-ROM drive. No support for DVD-RAM. Actual speeds may vary. Don't copy copyright-protected materials. Double Layer discs can store more data than single layer discs. Discs burned with this drive may not be compatible with many existing single-layer DVD drives and players. Flawless playback on all systems is not guaranteed.

HP 9.5mm Slim DVD Writer	**Description**	9.5mm height, tray-load	
	Mounting Orientation	Either horizontal or vertical	
	Interface Type	SATA/ATAPI	
	Dimensions (WxHxD)	128 x 9.5 x 127mm	
	Supported Media Types	DVD+R DVD+RW DVD+R DL DVD-R DL DVD-R DVD-RW CD-R CD-RW	
	Disc Capacity	**DVD-ROM**	8.5 GB DL or 4.7 GB standard
		Full Stroke DVD	< 200 ms (seek)
		Full Stroke CD	< 200 ms (seek)
	Maximum Data Transfer Rates	**CD ROM Read**	CD-ROM, CD-R Up to 24X CD-RW Up to 24X
		DVD ROM Read	DVD+RW Up to 8X DVD-RW Up to 8X DVD+R DL Up to 8X DVD-R DL Up to 8X DVD-ROM Up to 8X DVD-ROM DL Up to 8X DVD+R Up to 8X DVD-R Up to 8X
	Power	**Source**	SATA DC power receptacle
		DC Power Requirements	5 VDC ± 5%-100 mV ripple p-p
		DC Current	5 VDC -< 800 mA typical, <1600 mA maximum
	Operating Environmental (all conditions non-condensing)	**Temperature**	41° to 122° F (5° to 50° C)
		Relative Humidity	10% to 80%
		Maximum Wet Bulb Temperature	84° F (29° C)
	Operating Systems Supported	Windows 11, Windows 10, Windows 7 Professional 64-bit, Windows Vista Business 64*, Windows 2000. Red Hat® Enterprise Linux® (RHEL) 8, 9 Desktop/Workstation SUSE Linux® Enterprise Desktop 15 Ubuntu 20.04, 22.04 LTS * No driver is required for this device. Native support is provided by the operating system	
	Kit Contents	HP SATA DVD Writer drive, installation guide.	

NOTE: Actual speeds may vary. No support for DVD-RAM (DVD Writer). Does not permit copying of commercially available DVD movies or other copyright protected materials. Intended for creation and storage of your original material and other lawful uses. Double Layer discs can store more data than single layer discs. However, double-layer discs burned with this drive may not be compatible with many existing single-layer DVD drives and players.

HP 9.5mm Slim DVD-ROM	**Description**	9.5mm height, tray-load	
	Mounting Orientation	Either horizontal or vertical	
	Interface Type	SATA/ATAPI	
	Dimensions (WxHxD)	128 x 9.5 x 127mm	
	Disc Capacity	**DVD-ROM**	Single layer: Up to 4.7 GB Double layer: Up to 8.5 GB
	Access Times	**DVD-ROM Single Layer**	< 110 ms (typical)
		CD-ROM Mode 1	< 110 ms (typical)
		Full Stroke DVD	< 230 ms (typical)
		Full Stroke CD	< 220 ms (typical)
	Power	**Source**	SATA DC power receptacle
		DC Power Requirements	5 VDC ± 5%-100 mV ripple p-p
		DC Current	5 VDC -< 800 mA typical, <1600 mA maximum
	Operating Environmental (all conditions non-condensing)	**Temperature**	41° to 122° F (5° to 50° C)
		Relative Humidity	10% to 80%
		Maximum Wet Bulb Temperature	84° F (29° C)
	Operating Systems Supported	Windows 11, Windows 10, Windows 8.1, Windows 7 Professional 64-bit Red Hat® Enterprise Linux® (RHEL) 8, 9 Desktop/Workstation SUSE Linux® Enterprise Desktop 15 Ubuntu 20.04, 22.04 LTS No driver is required for this device. Native support is provided by the operating system.	
	Kit Contents	9.5mm Slim DVD-ROM Drive, 5.25"" ODD Bay adapter/carrier, slim SATA data/power cable, installation guide	

NOTE: Actual speeds may vary. No support for DVD-RAM (DVD Writer). Does not permit copying of commercially available DVD movies or other copyright protected materials. Intended for creation and storage of your original material and other lawful uses. Double Layer discs can store more data than single layer discs. However, double-layer discs burned with this drive may not be compatible with many existing single-layer DVD drives and players.

NETWORKING AND COMMUNICATIONS

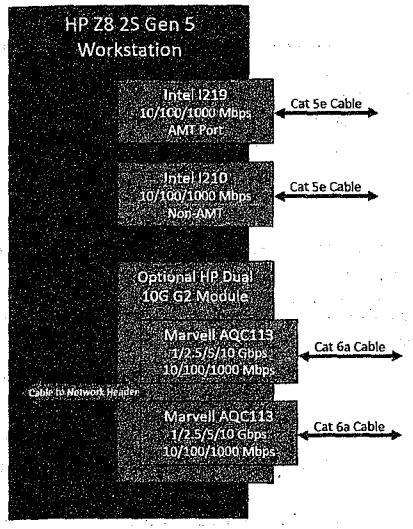

I219 (integrated)	**Connector**	RJ-45
	Cabling	Up to 100m with Cat 5e or better
	Controller	Intel I219LM
	Memory	N/A
	Data Rates Supported	10/100/1000Mbps
	Compliance	IEEE 802.3az, 802.3u, 802.1as/1588, 802.1Q, 802.1p
	Bus Architecture	PCIe
	Data Transfer Mode	BASE-T
	Power Requirements	N/A
	Network Transfer Mode	BASE-T
	Network Transfer Rate	10/100/1000Mbps
	Management Capabilities	Intel AMT, Wake-on-LAN, PXE, UEFI
	Kit Contents	Integrated into system
I210 (integrated)	**Connector**	RJ-45
	Cabling	Up to 100m with Cat 5e or better
	Controller	Intel I210
	Memory	N/A
	Data Rates Supported	10/100/1000Mbps

	Compliance	IEEE 802.3az, 802.3u, 802.3z, 802.3ab, 802.1AS/1588, 802.1Qav
	Bus Architecture	PCIe
	Data Transfer Mode	BASE-T
	Power Requirements	N/A
	Network Transfer Mode	BASE-T
	Network Transfer Rate	10/100/1000Mbps
	Management Capabilities	Wake-on-LAN, PXE, UEFI
	Kit Contents	Integrated into system
NVIDIA® Mellanox® ConnectX-6 DX Dual Port 10/25GbE SFP28 NIC	**Connector**	2 x SFP28 Transceiver Cage (Dual Port)*
	Cabling	Depends on transceiver pairing. Typically OM4 or higher MMF LC fiber optic cabling with LC SFP28 Transceivers.
	Controller	ConnectX6-DX
	Memory	256Mbit SPI Quad Flash Device
	Data Rates Supported	1/10/25GbE
	Compliance	– IEEE 802.3by 25 Gigabit Ethernet – IEEE 802.3ae 10 Gigabit Ethernet – IEEE 802.3ap based auto-negotiation and KR startup – IEEE 802.3ad, 802.1AX Link Aggregation – IEEE 802.1Q, 802.1P VLAN tags and priority – IEEE 802.1Qau (QCN) – Congestion Notification – IEEE 802.1Qaz (ETS) – IEEE 802.1Qbb (PFC) – IEEE 802.1Qbg – IEEE 1588v2 – Jumbo frame support (9.6KB) – Safety: CB/cTUVus/CE – EMC: CE/FCC/VCCI/RCM – RoHS Compliant – KCC – CAN ICES-3 (B) – NM EN 55035/55032 (Morocco) – UKCA
	Bus Architecture	PCIe Gen 4 x8
	Data Transfer Mode	PCI Express - stores and accesses Ethernet fabric connection information and packet data
	Power Requirements	11.5 Watts (typical)
	Network Transfer Rate	1Gbps, 10Gbps, 25Gbps **NOTE:** Network Transfer Rate depends on transceiver model.*
	Kit Contents	NVIDIA® Mellanox® ConnectX-6 DX Dual Port 10/25GbE SFP28 NIC
HP Dual Port 10GBase-T NIC Module G2	**Networking Interface**	2 RJ-45
	System Interface	Cabled from Dedicated Rear I/O Slot
	Networking Speeds Supported	10Gbps, 5Gbps, 2.5Gbps,1Gbps, 100Mbps, 10Mbps

Technical Specifications - Networking and Communications

	Cabling (up to 100m)	Cat5e (or higher) for 1Gbps Cat6a (or higher) for 10Gbps
	Power Consumption (active-typical)	5.5W at 1Gbps 11.2W at 10Gbps
	Physical Dimensions	0.875 in x 3 in x 2.75 in
	Connect Speed LED Indicators	Link/Activity LED • Off = No link • Blinking = Activity Speed LED • Amber = 1Gbps • Green = 10Gbps
	Operating Temperature	0 °C to 55 °C (32 °F to 131 °F)
Intel® X550 10GBASE-T Dual Port NIC	**Connector**	2 x RJ-45
	Cabling	Cat5 (or higher) for 100Mbps Cat5e (or higher) for 1Gbps, 2.5Gbps, or 5Gbps Cat6 (or higher) for 10Gbps up to 55m Cat6a (or higher) for 10Gbps up to 100m
	Controller	Intel X550-AT2
	Memory	Jumbo Frames up to 15.5KB, 64 Tx and 64Rx Queues per port, 160KB/port of programmable memory transmit buffers
	Data Rates Supported	100Mbps (BASE-TX), 1Gbps (BASE-T, 2.5Gbps, 5Gbps, 10Gbps
	Compliance	802.1q (VLAN), 802.1Qbb, 802.1p, 802.1Qaz
	Bus Architecture	PCIe 3x4
	Data Transfer Mode	PCIe Gen 3 x4 based interface
	Power Requirements	3.9W at 100Mbps 5.5W at 1Gbps 11.2W at 10Gbps
	Boot ROM Support	Yes
	Network Transfer Mode	Auto negotiation between 1GbE, 2.5GbE, 5GbE and 10GbE
	Management Capabilities	DMI 2.0 Support, Windows Management Instrumentation (WMI) and SNMP, PXE 2.0 through boot ROM, Multi-mode I/O Virtualization, VxLAN, VMDq, VLAN support with VLAN tag insertion
	Kit Contents	Intel® X550 10GBASE-T Dual Port NIC
Intel® I225-T1 Single Port 2.5GbE PCIe NIC	**Connector**	RJ-45 (Single Port)
	Cabling	Cat5e (or better) up to 100m
	Controller	Intel® Ethernet I225 Controller
	Memory	Jumbo Frames up to 9.5KB, 4 Tx and Rx Queues,
	Data Rates Supported	2.5GbE, 1GbE, 100MbE, 10MbE
	Compliance	IEEE 802.3 auto negotiation, 802.3x, 802.3z
	Bus Architecture	PCIe Gen 3.1x1
	Data Transfer Mode	PCIe-based interface for active state operation
	Power Requirements	1.9 Watts (typical)

Technical Specifications - Networking and Communications

	Management Capabilities	WOL, PXE 2.1, Power Management Protocol Offload (proxying), MAC Power Management, Active State Power Management,
	Kit Contents	Intel® I225-T1 1-Port 2.5GbE NIC with standard height bracket attached and Low-profile bracket included Product Literature
Intel® Ethernet I350-T4V2 4-Port 1Gb NIC	**Connector**	4x RJ-45 (Quad Port)
	Cabling	Cat3 (or higher) for 10Mbps Cat5 (or higher) for 100Mbps Cat5e (or higher) for 1Gbps up to 100m
	Controller	Intel® I350
	Memory	Jumbo Frames up to 9.5KB, 8 Tx/Rx Queue pairs per port, Main Internal memory is Error Code Correcting
	Data Rates Supported	10Mbps, 100Mbps, 1Gbps
	Compliance	IEEE 802.3 auto negotiation, 802.3, 802.3u, 802.3ab, 802.3x, 802.3z, IEEE1588 protocol and 802.1AS implementation, 802.3az EEE
	Bus Architecture	PCI Express 2.1 x4
	Data Transfer Mode	PCIe-based interface for active state operation
	Power Requirements	5W
	Network Transfer Mode	Multi-speed, full, and half-duplex
	Network Transfer Rate	10BASE-T 100BASE-Tx 1000BASE-T
	Management Capabilities	WOL, PXE 2.1, UEFI, Power Management Protocol Offload (proxying), MAC Power Management, Active State Power Management, VLAN, ACPI
	Kit Contents	Intel® Ethernet I350-T4V2 4-Port 1Gb NIC with full-height bracket installed Low-profile bracket included
Allied Telesis AT-2911T/2-901 Dual Port 1GbE NIC	**Connector**	2 x RJ-45 (Dual Port)
	Cabling	Cat3 (or higher) for 10Mbps Cat5 (or higher) for 100Mbps Cat5e (or higher) for 1Gbps up to 100m
	Memory	17 Rx and 16 Tx queues
	Data Rates Supported	10/100/1000 Mbps
	Compliance	IEEE 802.1p (Quality of Service), IEEE 802.1Q (VLANs), IEEE 802.2 (LLC), IEEE 802.3ac (MAC), IEEE 802.3x (Flow control auto-negotiation), IEEE 802.3z (1000 Base-X), IEEE 802.3ad (Link aggregation), IEEE 802.3ab (10/100/1000T) RoHS, UL, FCC/EN55022 Class A, TUV, EN55024, CE, C-TICK, VCCI
	Bus Architecture	PCIe 2x1
	Data Transfer Mode	PCIe-based interface
	Power Requirements	2.4 Watts (typical)
	Management Capabilities	VLAN support, Link aggregation LACP, Link aggregation smart switch, Failover, Smart Load Balancing (SLB), iSCSI boot support, Windows Management Instrumentation (WMI), PXE 2.1, SNMP
	Kit Contents	Allied Telesis AT-2911T/2-901 Dual Port 1GbE NIC with low-profile bracket attached and standard bracket included

Technical Specifications - Networking and Communications

Allies Telesis AT-2914SX/LC 1GB LC Fiber NIC	**Connector**	LC Fiber (Single Port)
	Cabling	50/125 µm (core/cladding) multimode fiber optic cable up to 500m 62.5/125 µm (core/cladding) multimode fiber optic cable up to 220m
	Memory	Jumbo Frames up to 9.6KB
	Data Rates Supported	1000SX (1GbE Fiber at 850nm Wavelength)
	Compliance	IEEE 802.1p (Quality of Service), IEEE 802.1Q (VLANs), IEEE 802.2 (LLC), IEEE 802.3ac (MAC), IEEE 802.3x (Flow control auto-negotiation), IEEE 802.3z (1000 Base-X), IEEE 802.3ad (Link aggregation) RoHS, UL, FCC/EN55022 Class A, TUV, EN55024, CE, C-TICK, VCCI
	Bus Architecture	PCIe x1
	Data Transfer Mode	PCIe-based interface
	Power Requirements	1.5 Watts (typical)
	Network Transfer Rate	1000SX only (1GbE Fiber at 850nm Wavelength)
	Management Capabilities	UEFI, Smart Load Balancing and failover, Link aggregation (IEEE802.3ad), Generic trunking (FEC/GEC) / IEEE 802.3ad-draft static, VLAN Support
	Kit Contents	Allied Telesis AT-2914SX/LC 1GB LC Fiber NIC with low-profile bracket attached and standard height bracket included

Intel® AX210 Wi-Fi 6E non-vPro + Bluetooth® 5.2 wireless card with External Antenna WLAN	**Connector**	Wireless
	Cabling	N/A
	Controller	Intel® AX210
	Data Rates Supported	Wi-Fi 6e (2.4GHz/5GHz/6GHz)
	Compliance	Wi-Fi Alliance* Wi-Fi Alliance CERTIFIED 6, WiFi CERTIFIED a/b/g/n/ac, WMM, WMM-Power Save, WPA2, WPA3, Wi-Fi Direct, and Wi-Fi Agile Multiband IEEE WLAN Standard 802.11-2016, 802.11a, b, d, e, g, h, I, k, n, r, u, v, w, ac, and ax, Bluetooth® 5.2
	Bus Architecture	PCIe G3x1 for WLAN, USB3.1G1 for BT
	Management Capabilities	Authentication Protocols: 802.1X EAP-TLS, EAP-TTLS/MSCHAPv2, PEAPv0 - MSCHAPv2 (EAP-SIM, EAP-AKA, EAP-AKA') Encryption: 128-bit AES-CCMP, 256-bit AES-GCMP UEFI
	Kit Contents	Intel® AX210 Wi-Fi 6 + Bluetooth® 5.2 PCIe NIC External Dipole Antenna Installation Instructions

*Wi-Fi 6E requires a Wi-Fi 6E router, sold separately to function in the 6GHz band. Availability of public wireless access points limited. Wi-Fi 6E is backwards compatible with prior 802.11 specs. And available in countries where Wi-Fi 6E is supported.

Date of change:	Version History:		Description of change:
March 1, 2023	From v1 to v2	Changed	Optical and Removable Storage, Networking and Communications sections and Changed Format
March 30, 2023	From v2 to v3	Changed	Image page 1
April 1, 2023	From v3 to v4	Changed	Format
May 1, 2023	From v4 to v5	Changed	Power Supply section
June 1, 2023	From v5 to v6	Changed	Graphics, Storage, Networking and Communications, Social and Environmental Responsibility, Overview sections
July 1, 2023	From v6 to v7	Added	HP Anyware Remote System Controller section

Technical Specifications - Networking and Communications

		Changed	Optical and Removable Storage, Networking and Communications sections
August 1, 2023	From v7 to v8	Changed	Storage Drives, Social and Environmental Responsibility sections
August 1, 2023	From v8 to v9	Changed	ENVIRONMENTAL DATA section
September 1,2023	From v9 to v10	Changed	Overview, NETWORKING AND COMMUNICATIONS sections
September 25, 2023	From v10 to v11	Changed	SOFTWARE AND SECURITY section
October 1, 2023	From v11 to v12	Changed	Input Devices section

0203

achieve any optional points.

to the product are not included in the Total Optional Criteria Score, and are not reflected above.

For any questions, comments, or feedback regarding the EPEAT Registry, please contact us.

Contact Us

+1.503.279.9383

PO Box 12149 Portland, OR 97212-0149 USA

Stay connected with regular updates from EPEAT

Sign up

EPEAT Registry Privacy Policy

EPEAT Registry Terms of Use

4.2 Materials Selection	**3 / 3**
4.4 Product longevity/life-cycle extension	**1 / 2**
4.5 Energy Conservation	**0 / 2**
4.7 Packaging	**2 / 2**
4.8 Life cycle assessment and carbon footprint	**6 / 6**
4.9 Corporate Environmental Performance	**9 / 9**
4.10 Corporate social responsibility	**4 / 6**
TOTAL OPTIONAL CRITERIA SCORE:	38 / 46

Please note that it is not required for a product to

Some optional criteria may not be applicable to a product. Optional criteria that are not applicable (N/A)

EXPORT PRODUCT SUMMARY

EPEAT Tier Score Detail

For a product to be listed on the EPEAT Registry, it must, at a minimum, meet the applicable "required" criteria. Click here to see a list of the required criteria for this product category.

This product has met the necessary required criteria.

Along with required criteria, products can also meet optional criteria and score optional points. It is not required for a product to achieve any optional points.

Products that meet all required criteria and achieve **less than 50%** of the optional points are rated at
EPEAT Bronze

Products that meet all required criteria and achieve **50 - 74%** of the optional points are rated at
EPEAT Silver

Products that meet all required criteria and achieve **75 - 100%** of the optional points are rated at
EPEAT Gold

The optional criteria for this product category and optional points achieved by this product are listed below.

Optional Criteria	Scores
4.1 Substance Management	**13 / 16**

GLOBAL ELECTRONICS COUNCIL® epeat

Login

RETURN TO SEARCH

HP Z8 G5 Workstation ENERGY STAR

COMPUTERS & DISPLAYS

Product Summary:

Product Type:	**Workstation**
Registered In:	**Brazil**
Manufacturer:	**HP**
EPEAT Tier:	**Gold**
Registration Date:	**2023-03-21**
Product Status:	**Active**
Exceptions:	**Configurations that are not ENERGY STAR qualified do not meet required criterion 4.5.1.1.**
Universal Product Code(s):	**195908359173, 196188471036, 196188471067**

All unique product identifiers existing for this product may not be listed here. If the unique product identifier you are looking for is not listed, please contact EPEAT at EPEAT@GEC.org.

DELL Technologies
TITANIUM PARTNER

PROPOSTA

À
CÂMARA MUNICIPAL DE SOROCABA | Pregão n.º 25/2023

A2 INFOTECH COMERCIO E PRESTAÇÃO DE SERVIÇOS E INFORMATICA LTDA-EPP
CNPJ: 41.571.174/0001-91
Endereço: Rua Java Nº34, Sala 11, Jardim Do Mar, São Bernardo do Campo, São Paulo - CEP:09.750-650
Representante: Marco Antônio de Carvalho **RG:** 10.742.042-9 **CPF:** 935.596.408-06
E-mail: marco@a4inf.com.br

Relação de Itens					
Item	**Qtd**	**Objeto**	**Características Técnicas**	**Vl. Unit**	**Vl. Total**
1	**2**	Computador de Mesa Workstation **Edição de Imagens e Produção Gráfica**	MICROCOMPUTADOR DELL PRECISION 7920 TOWER Processador: Intel® Xeon® Silver 4214R (16.5 MB cache, 12 cores, 24 threads, 2.40 GHz to 3.50 GHz Turbo, 100 W) Sistema Operacional: Windows 11 Pro para Workstations (mais de 6 núcelos), português (Brasil) Placa de Video: NVIDIA® RTX™ A5000, 24 GB GDDR6, 4 DP Memória: 128 GB: 2 x 64 GB, DDR4, 2933 MT/s, RDIMM, ECC Armazenamento: Disco rígido empresarial SATA de 3,5", 4 TB e 7.200 RPM 2º disco Adicional: Disco rígido empresarial SATA de 3,5", 4 TB e 7.200 RPM 3º disco Adicional: Disco rígido empresarial SATA de 3,5", 4 TB e 7.200 RPM Unidade de Disco SSD: Unidade de estado sólido (SSD) de 512 GB, Classe 40 Configuração de HD: Unidade de boot PCIe (tipo e capacidade selecionados no módulo SSD PCIe) Unidade Óptica: 16 unidades DVD+/-RW	**R$ 64.450,00**	**R$ 128.900,00**

			Cabo: Brazil Power Cord Gerenciamento de Sistema: MOD,STNG,ME,DISABLE,MATIRA Resfriamento Térmico: MOD,THRM,HTSNK,FAN,CPU0,7920T Placa de Rede: 1Gbit NIC add-in card (PCIe- Intel) Volume de Armazenamento: A unidade de boot ou o volume de boot é maior que 2 TB (selecione quando um HDD de 3 TB/4 TB for adquirido) Base: Dell Precision T7920 Integrated Intel AHCI SATA chipset controller (8x 6.0Gb/s), SW RAID 0,1,5,10 MOD,LBL,REG,7920T,DAO Guia de referência W10 Guia de segurança/ambiental e regulamentar - em Português (Brasil) VMWCB Endpoint Stnd NGAV BEDR+Absolute DDS PREM w/ProSP LATAM Bundle 1yr 3 anos de assistência técnica para hardware com atendimento no local no próximo dia útil após diagnóstico por telefone Avaliação do Microsoft® Office 2016 - Válido por 30 dias Precision 7920 Tower Chassis CL FMX TPM Teclado e mouse sem fio Dell Pro — KM5221W**		
2	**1**	Computador de Mesa Workstation **Produção de áudio e vídeo e Streaming para Rádio**	MICROCOMPUTADOR DELL PRECISION 7920 TOWER Processador: Intel® Xeon® Silver 4214R (16.5 MB cache, 12 cores, 24 threads, 2.40 GHz to 3.50 GHz Turbo, 100 W) Sistema Operacional: Windows 11 Pro para Workstations (mais de 6 núcelos), português (Brasil) Placa de vídeo: NVIDIA® RTX™ A4000, 16 GB GDDR6, 4 DP Memória: 64 GB: 4 x 16 GB, DDR4, 2933 MT/s, RDIMM, ECC	**R$ 46.950,00**	**R$ 46.950,00**

			Armazenamento: 2 TB, 7200 RPM, 3.5-inch, SATA, HDD, AG-Enterprise Class 2º Disco Adicional: 2 TB, 7200 RPM, 3.5-inch, SATA, HDD, AG-Enterprise Class 3º Disco Adicional: 2 TB, 7200 RPM, 3.5-inch, SATA, HDD, AG-Enterprise Class Unidade de estado sólido (SSD) de 512 GB, Classe 40 Unidade de boot PCIe (tipo e capacidade selecionados no módulo SSD PCIe) 16 unidades DVD+/-RW Brazil Power Cord MOD,STNG,ME,DISABLE,MATIRA MOD,THRM,HTSNK,FAN,CPU0,7920T A unidade de boot ou o volume de boot é maior que 2 TB (selecione quando um HDD de 3 TB/4 TB for adquirido) Dell Precision T7920 Integrated Intel AHCI SATA chipset controller (8x 6.0Gb/s), SW RAID 0,1,5,10 MOD,LBL,REG,7920T,DAO Guia de referência W10 Guia de segurança/ambiental e regulamentar - em Português (Brasil) Additional Software Win 11 – Matira VMWCB Endpoint Stnd NGAV BEDR+Absolute DDS PREM w/ProSP LATAM Bundle 1yr 3 anos de assistência técnica para hardware com atendimento no local no próximo dia útil após diagnóstico por telefone Dell Optimizer for Precision with AI MOD,SHP MTL,R740,GC Avaliação do Microsoft® Office 2016 - Válido por 30 dias Precision 7920 Tower Chassis CL FMX TPM Teclado e mouse sem fio Dell Pro — KM5221W**		
			Valor Total:		**175.850,00**

Valor: (Cento e Setenta e cinco mil, oitocentos e cinquenta reais.)

A2 INFOTECH COMERCIO E PRESTACAO DE SERVICOS E INFORMATICA LTDA.
Rua Java, n° 34, Sala 11 – Jardim do Mar – São Bernardo do Campo – CEP: 09750-650 - SP
CNPJ N° 41.571.174/0001-91– I.E.: 799.406.419.112– I.M.: 29269-0

A EMPRESA: **A2 INFOTECH COMERCIO E PRESTAÇÃO DE SERVIÇOS E INFORMATICA LTDA-EPP** DECLARA QUE: ESTÃO INCLUSAS NO VALOR COTADO TODAS AS DESPESAS COM MÃO DE OBRA E, BEM COMO, TODOS OS TRIBUTOS E ENCARGOS FISCAIS, SOCIAIS, TRABALHISTAS, PREVIDENCIÁRIOS E COMERCIAIS E, AINDA, OS GASTOS COM TRANSPORTE E ACONDICIONAMENTO DOS PRODUTOS EM EMBALAGENS ADEQUADAS. VALIDADE DA PROPOSTA: 60 (SESSENTA) DIAS. QUE O PRAZO DE INÍCIO DA ENTREGA DOS ITENS SERÁ DE ACORDO COM OS TERMOS ESTABELECIDOS NO ANEXO I, DESTE EDITAL A CONTAR DO RECEBIMENTO, POR PARTE DA CONTRATADA, DA ORDEM DE COMPRA OU DOCUMENTO SIMILAR, TODOS OS ITENS AVALIADOS, SOB PENA DE DEVOLUÇÃO DE NÃO ACEITE, CASO NÃO ATENDA A DESCRIMINAÇÃO DO TERMO DE REFERÊNCIA DO REFERIDO EDITAL OU DE MÁ QUALIDADE.

DECLARAMOS SOB PENAS DE LEI QUE ATENDEMOS NA INTEGRA A ESTE EDITAL ASSIM COMO SEUS ANEXOS.

Pazo de entrega: De acordo com Edital
Validade da Proposta: De acordo com edital
ASSISTENCIA TÉCNICA AUTORIZADA DO FABRICANTE:
PROXXI TECNOLOGIA LTDA
CNPJ: 47.379.565/0079-55
ENDEREÇO: RUA APIAI, 49 – JARDIM LEOCADIA – SOROCABA/ SP- CEP: 18085350
CONTATO: MILTON RIBEIRO CORREIA, FONE: (14) 99757-8659

São Bernardo do Campo, 01 de novembro de 2023.

MARCO ANTONIO DE CARVALHO
RG 10.742.042-9
CPF Nº 935.596.408-06
EXECUTIVO DE CONTAS
A2 INFOTECH COMERCIO E PRESTACAO DE SERVICOS E INFORMATICA LTDA-EPP
CNPJ:41.571.174/0001-91

CAMARA MUNICIPAL DE SOROCABA – PREGÃO PRESENCIAL Nº 25/2023

ITEM 01- MICROCOMPUTADOR DELL PRECISION 7920 TOWER

Módulo	Descrição
Processador	Intel® Xeon® Silver 4214R (16.5 MB cache, 12 cores, 24 threads, 2.40 GHz to 3.50 GHz Turbo, 100 W)
Sistema Operacional	Windows 11 Pro para Workstations (mais de 6 núcelos), português (Brasil)
Placa de vídeo	NVIDIA® RTX™ A5000, 24 GB GDDR6, 4 DP
Memória	128 GB: 2 x 64 GB, DDR4, 2933 MT/s, RDIMM, ECC
Armazenamento	Disco rígido empresarial SATA de 3,5", 4 TB e 7.200 RPM
2° disco rígido adicional	Disco rígido empresarial SATA de 3,5", 4 TB e 7.200 RPM
3° disco rígido adicional	Disco rígido empresarial SATA de 3,5", 4 TB e 7.200 RPM
Unidades ultrarrápidas da Dell (SSDs PCIe)	Unidade de estado sólido (SSD) de 512 GB, Classe 40
Configuração de HD	Unidade de boot PCIe (tipo e capacidade selecionados no módulo SSD PCIe)
Unidade óptica	16 unidades DVD+/-RW
Cabo	Brazil Power Cord
Gerenciamento de sistemas	MOD,STNG,ME,DISABLE,MATIRA
Resfriamento Térmico	MOD,THRM,HTSNK,FAN,CPU0,7920T
	1Gbit NIC add-in card (PCIe- Intel)
Volume de armazenamento	A unidade de boot ou o volume de boot é maior que 2 TB (selecione quando um HDD de 3 TB/4 TB for adquirido)
Base	Dell Precision T7920
1° Ctl	Integrated Intel AHCI SATA chipset controller (8x 6.0Gb/s), SW RAID 0,1,5,10
Etiqueta regulatória	MOD,LBL,REG,7920T,DAO
Guia de instalação	Guia de referência W10
Documentação/discos	Guia de segurança/ambiental e regulamentar - em Português (Brasil)
Software de aplicativos que não são da Microsoft	Additional Software Win 11 - Matira
Opções de recuperação do sistema operacional	Mídia do Windows não incluída
Criptografia e prevenção contra ameaças da Dell	VMWCB Endpoint Stnd NGAV BEDR+Absolute DDS PREM w/ProSP LATAM Bundle 1yr

Assistência técnica	3 anos de assistência técnica para hardware com atendimento no local no próximo dia útil após diagnóstico por telefone
Otimizador	Dell Optimizer for Precision with AI
Material de envio/Embalagem	MOD,SHP MTL,R740,GC
Microsoft Office	Avaliação do Microsoft® Office 2016 - Válido por 30 dias
Opções de Chassi	Precision 7920 Tower Chassis CL FMX
Segurança de TPM	TPM
Acessórios mais vendidos	Teclado e mouse sem fio Dell Pro — KM5221W**

CAMARA MUNICIPAL DE SOROCABA – PREGÃO PRESENCIAL Nº 25/2023

ITEM 02- MICROCOMPUTADOR DELL PRECISION 7920 TOWER

Módulo	Descrição
Processador	Intel® Xeon® Silver 4214R (16.5 MB cache, 12 cores, 24 threads, 2.40 GHz to 3.50 GHz Turbo, 100 W)
Sistema Operacional	Windows 11 Pro para Workstations (mais de 6 núcelos), português (Brasil)
Placa de vídeo	NVIDIA® RTX™ A4000, 16 GB GDDR6, 4 DP
Memória	64 GB: 4 x 16 GB, DDR4, 2933 MT/s, RDIMM, ECC
Armazenamento	2 TB, 7200 RPM, 3.5-inch, SATA, HDD, AG-Enterprise Class
2º disco rígido adicional	2 TB, 7200 RPM, 3.5-inch, SATA, HDD, AG-Enterprise Class
3º disco rígido adicional	2 TB, 7200 RPM, 3.5-inch, SATA, HDD, AG-Enterprise Class
Unidades ultrarrápidas da Dell (SSDs PCIe)	Unidade de estado sólido (SSD) de 512 GB, Classe 40
Configuração de HD	Unidade de boot PCIe (tipo e capacidade selecionados no módulo SSD PCIe)
Unidade óptica	16 unidades DVD+/-RW
Cabo	Brazil Power Cord
Gerenciamento de sistemas	MOD,STNG,ME,DISABLE,MATIRA
Resfriamento Térmico	MOD,THRM,HTSNK,FAN,CPU0,7920T
Volume de armazenamento	A unidade de boot ou o volume de boot é maior que 2 TB (selecione quando um HDD de 3 TB/4 TB for adquirido)
Base	Dell Precision T7920
1º Ctl	Integrated Intel AHCI SATA chipset controller (8x 6.0Gb/s), SW RAID 0,1,5,10
Etiqueta regulatória	MOD,LBL,REG,7920T,DAO
Guia de instalação	Guia de referência W10
Documentação/discos	Guia de segurança/ambiental e regulamentar - em Português (Brasil)
Software de aplicativos que não são da Microsoft	Additional Software Win 11 - Matira

Criptografia e prevenção contra ameaças da Dell	VMWCB Endpoint Stnd NGAV BEDR+Absolute DDS PREM w/ProSP LATAM Bundle 1yr
Assistência técnica	3 anos de assistência técnica para hardware com atendimento no local no próximo dia útil após diagnóstico por telefone
Otimizador	Dell Optimizer for Precision with AI
Material de envio/Embalagem	MOD,SHP MTL,R740,GC
Microsoft Office	Avaliação do Microsoft® Office 2016 - Válido por 30 dias
Opções de Chassi	Precision 7920 Tower Chassis CL FMX
Segurança de TPM	TPM
Acessórios mais vendidos	Teclado e mouse sem fio Dell Pro — KM5221W**

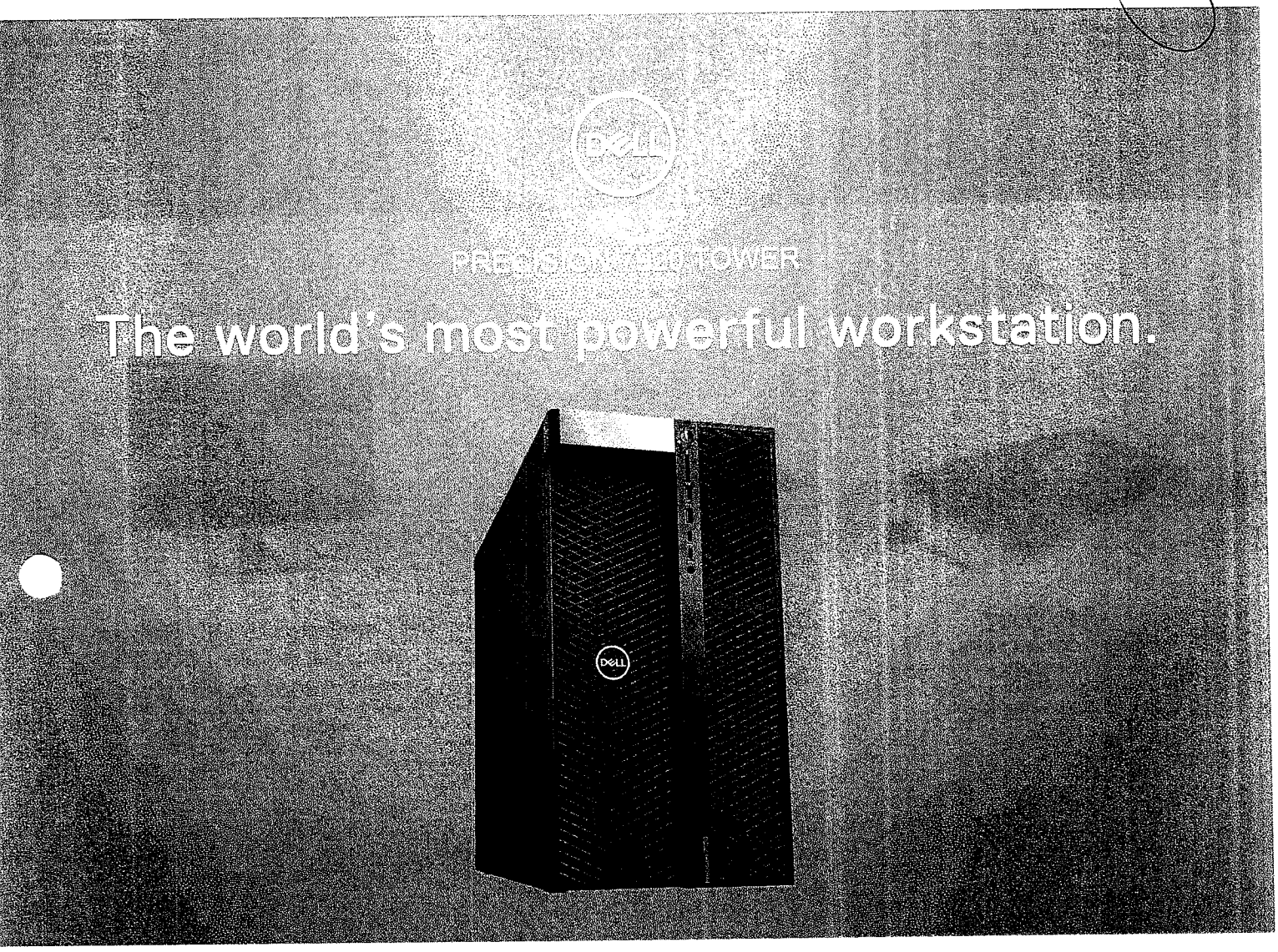

POWERFUL PERFORMANCE

Power through the most complex, demanding applications more quickly with a new generation of dual-socket performance with the Intel Xeon Scalable Processor family featuring up to 28 cores per processor. System memory is expandable up to 3TB of 2666MHz with select processors. In addition, every Dell Precision comes with the exclusive Dell Precision Optimizer (DPO) software, which automatically tunes your workstation to run some of the most popular (ISV) applications at the fastest speeds possible. DPO Premium is an AI-based version which that uses machine learning to optimize the workstation based on how the user uses it.

INNOVATIVE DESIGN

FlexBay design supports a range of modules from scalable storage to security options, you can build the workstation designed for your creative expertise. Secure your data with the optional Smart Card (CAC/PIV) reader, hot swap NVMe SSDs and lockable hard drive carriers. The best-in-class smart design includes integrated front and rear handles for easy deployment and moves and an externally accessible tool-less (lockable) power supply for superior serviceability.

LATEST TECHNOLOGY

Ready for complex projects, including artificial intelligence and virtual reality workflows, with next generation Radeon™ Pro and highest performing NVIDIA Quadro® RTX professional graphics with support for up to 900W of graphics power. No project is too big with up to 136TB of total storage in front and rear FlexBays provide maximum storage expandability with SATA, SAS and PCIe M.2/U.2 NVMe solid state drives featuring hot swap access, so you never have to stop creating.

OUTSTANDING RELIABILITY

The revolutionary multichannel thermal design delivers advanced cooling and acoustics so you can enjoy longer productivity under heavy workloads. Precision workstations are tested (Independent Software Vendor certified) to ensure the high-performance applications you rely on every day run smoothly.

Essential Accessories

PRECISION 7920 TOWER

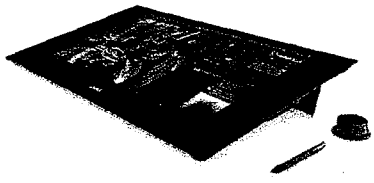

Dell Canvas

Bring your ideas to life with a 27-inch workspace that empowers natural digital creation. Featuring a precise EMR pen, totem, and touch surface.

Dell Wireless Premium Keyboard & Mouse Combo | KM717

Enhance productivity and enjoy its elegant design that will fit into virtually any workspace. For increased productivity you can simultaneously pair up to two compatible devices with Bluetooth LE.

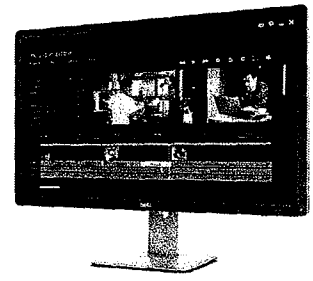

Dell UltraSharp Ultra HD 8K Monitor with PremierColor | UP3218K

Experience realistic images like never before on the award-winning, world's first 31.5" 8K monitor featuring Dell PremierColor.

Jabra Evolve 75

With the ambient noise cancellation feature of this wireless headset you can hear every word clearly on your next call. This easy to carry device is certified for Microsoft Skype for Business.

3Dconnexion SpaceMouse Wireless

SpaceMouse Pro Wireless handles 3D navigation for a revolutionary two-handed work style preferred by the world's top 3D professionals. Intuitively examine and analyze your designs from every angle.

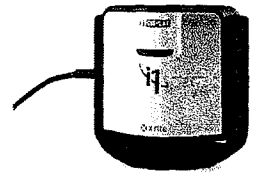

X-Rite Colorimeter i1Display Pro

The i1Display Pro ensures a perfectly calibrated and profiled display while delivering the speed, options and flexibility needed to maintain color accuracy.

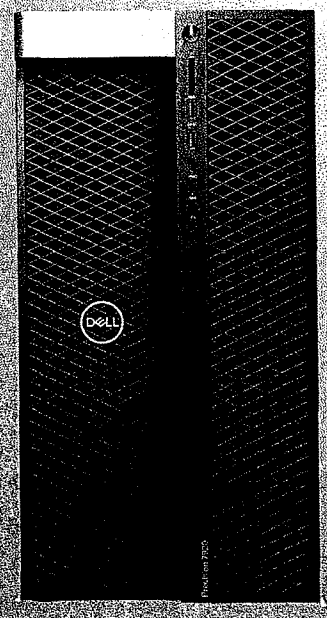

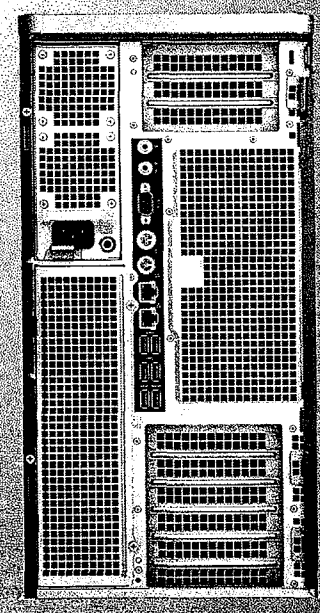

PRECISION 7920 TOWER

Create without limits.

ISV certification applies to select configurations:

1 System memory may be used to support graphics, depending on system memory size and other factors.

2 Hard Drive capacity varies with preloaded material and will be less.

3 Systems Management Options: Intel® vPro Technology - Fully vPro-capable at point of purchase; the vPro systems management option requires vPro processors. Includes support for *Intel Advanced Management Technology (AMT) 9.x. Intel® Standard Manageability - Fully enabled at point of purchase, the Intel Standard Management option is a subset of the AMT* features. ISM is not upgradeable to vPro technology post-purchase. No Out-of-Band Systems Management - This option entirely removes Intel out of band systems (OOB) management features. The system can still support in band management. OOB management support through AMT cannot be upgraded post-purchase.

4 Availability and terms of Dell Services vary by region. For more information, visit Dell.com/servicecontracts/global; Limited Hardware Warranty available by writing Dell USA LP, Attn: Warranties, One Dell Way, Round Rock, TX 78682 or see www.dell.com/warranty; Onsite Service after Remote Diagnosis: Remote Diagnosis is determination by online/phone technician of cause of issue; may involve customer access to inside of system and multiple or extended sessions. If issue is covered by Limited Hardware Warranty (www.dell.com/warranty) and not resolved remotely, technician and/or part will be dispatched, usually within 1 business day following completion of Remote Diagnosis. Availability varies. Other conditions apply.

Features & Technical Specifications

PRECISION 7920 TOWER

Feature	Precision 7920 Tower Technical Specifications
Storage Controller	**Integrated:** Intel® chipset SATA controller (6Gb/s) with 8 SATA ports plus dedicated port for an optical drive. Intel RSTe software RAID 0,1,5,10. Intel RSTe (vROC) software RAID 0,1,10 option (motherboard activation key) for M.2 NVMe PCIe SSDs on 1st Dell Ultra-Speed Drive Quad x16 card or Duo x8 card (RAID 0,1) and for 2 x front FlexBay M.2/U.2 NVMe PCIe SSDs (RAID 0,1) or front FlexBay NVMe PCIe SSDs RAID 0,10 can span 2 Ultra-Speed Drive Quad x16 cards (APOS) but they cannot contain the Operating System boot drive Customer kit available for Intel RSTe (vROC) motherboard activation key for NVMe RAID support. **Optional:** Broadcom MegaRAID® SAS 9440-8i 12Gb/s SAS (6Gb/s SATA) PCIe controller, 8 ports. Software RAID 0,1,5,10. MegaRAID® SAS 9460-16i 12Gb/s SAS (6Gb/s SATA)) PCIe controller (4GB cache with Flash module/Super Cap backup) Hardware RAID 0,1,5,10 MegaRAID 9460 controller NVMe option supports up to 4 front FlexBay M.2/U.2 NVMe PCIe SSDs with Hardware RAID 0,1,5,10
Communications	**Integrated:** Intel® i219 & i210 Gigabit Ethernet controllers with Intel Remote Wake UP, PXE and Jumbo frames support **Optional:** Intel® i210 10/100/1000 single port PCIe (Gen 3 x1) gigabit network card, Intel® X550-T2 10GbE dual port PCIe (Gen 3 x4) network card, Intel Dual Band Wireless AC 8265 (802.11ac) 2x2 + Bluetooth module, Aquantia AQN-108 2.5Gbit/5Gbe single port PCIe (Gen3 x4) network card
Audio Controller	Integrated Realtek ALC3234 High Definition Audio Codec (2 Channel)
Speakers	Internal Speaker; Optional Dell 2.0 stereo speaker systems available and Dell sound bar for select flat-panel displays
Add-in cards	**Optional:** Dell Precision Ultra-Speed Drive Duo (HH/HL,x8) & Ultra-Speed drive Quad (FH/FL,x16) with active cooling. Support for up to 2 and 4 M.2 PCIe NVMe SSDs respectively. Optional USB 3.1 (Gen 2) 10Gb/s Type C card (2 ports) 1 DP pass-through port Optional dual & quad display Teradici PCoIP remote workstation host PCIe cards Optional Thunderbolt 3 PCIe Card (2 ports) 1 DP pass-through port Optional Serial Port PCIe Card
I/O Ports	**Front** 2 – USB 3.1 Gen 1 Type A 2 – USB 3.1 Type C 1 – Universal Audio Jack **Internal** 1 – USB 2.0 Type A 1 - 2 x 5 USB 2.0 header. (requires 3rd party splitter cable to support 2 x USB 2.0 Type A ports) 8 – SATA @6Gb/s plus 1 for optical
I/O Ports	**Rear** 6 – USB 3.1 Gen 1 Type A 1 – Serial 2 – RJ45 Network 2 – PS2 1 –Audio Line out 1– Audio Line in/Microphone
Chassis	**HxWxD:** 17.05" x 8.58" x 22.29", 433mm x 218mm x 566mm. Optional 19" rackmount rail kit Starting at Weight 45.0lb/20.4kg Bays: (4) FlexBays and (1) 5.25" FlexBay supporting up to 10 x 3.5" or 2.5" drives (with MegaRAID 9460i-16 controller) (1) Slimline optical bay option adjacent to 5.25" bay; Available APOS, 2nd 5.25" bay kit - consumes/ converts 2 FlexBays, (1) SD slot UHS II Class 3 with read only support (SW enabled). Available PCIe backplane FlexBay chassis supporting 1-2 x or 3-4 x (dual CPUs) M.2/U.2 PCIe NVMe SSDs. Up to 4 M.2/U.2 drives with MegaRAID 9460 NVMe hardware RAID controller option. Slots: All slots PCIe Gen 3: (2) PCIe x16, (2) additional x16 slots with 2nd CPU; (1) PCIe x8 open ended, (1) x16 wired as x 4, (1) x16 wired as x1 Power Supply: 1400W (input voltage 181VAC - 240VAC) –90% efficient (80PLUS Gold Certified) Externally accessible/removable/lockable
Storage devices	**Slimline options:** DVD-ROM; DVD+/-RW, CAC/PIV card reader. **5.25" Bay Options:** BD, DVD+/-RW;
Security Options (Check regional availability)	Trusted Platform Module (TPM 2.0); Optional CAC/ PIV card reader for slimline bay, chassis Intrusion switch; Setup/BIOS Password; I/O Interface Security; Kensington® lock slot, Padlock ring, lockable power supply; Optional hard drive locking sleds (key lock), Dell Data Guardian, Dell Endpoint Security Suite Enterprise Lockable front bezel (covers front FlexBays), Front FlexBay NVMe drives are removable (hot swap)
Manageability[3]	AMT or vPro with DASH support Dell vPro Enhancements (Grasslake) SNMT/CIM vis OMCI Dell Command Suite
Regulatory and Environmental Compliance	Energy Star® configurations available including 80 PLUS® registered Gold power supplies; EPEAT® registered (see epeat.net for specific registration rating/status by country); China CECP; GS Mark. For a complete listing of declarations & certifications, see Dell's regulatory & compliance homepage at dell.com/regulatory_compliance
Warranty & Support Services[4]	3-Year Limited Hardware Warranty and 3-year NBD On-Site Service after Remote Diagnosis **Optional:** Dell ProSupport is designed to rapidly respond to your business's needs, help protect your investment and sensitive data, and provide enhanced proactive support services to help reduce risk and complexity within your IT environment

0217

Built for business

Dell Technologies Unified Workspace

Dell Technologies Unified Workspace is the most comprehensive solution to deploy, secure, manage and support virtually all devices from the cloud. We designed this revolutionary solution with intelligence and automation providing you with visibility across the entire endpoint environment. We help you save time, improve user experience, optimize resources and strenthen security.

DEPLOY

Our modern deployment solution, ProDeploy in the Unified Workspace allows you to revolutionize the way deployment gets done. By spending just one hour for set up , IT can then hand deployment to Dell and have preconfigured systems shipped directly to the end users--wherever they are.

SECURE

Dell Endpoint Security for the Unified Workspace helps you manage growing cyber risks while embracing workforce transformation. With Dell SafeGuard and Response powered by Secureworks, you gain actionable insight to help you quickly and efficiently prevent, detect and respond to cyber-attacks - keeping your environment free from harm.

MANAGE

We integrated our hardware management solution Dell Client Command Suite with VMware Workspace ONE, allowing you to take advantage of unified endpoint management (UEM) and manage the firmware, operating system and applications for all devices from the Workspace ONE console. UEM simplifies the management of the entire environment saving IT time from having to work between separate consoles for PCs and phones.

SUPPORT

ProSupport Plus continues to be the only predictive and proactive support in the market. When compared to key competitors, ProSupport Plus with SupportAssist reduced time to resolve a failed hard drive with up to 11x faster time to resolution*

*Based on a Principled Technologies test report, "Spend Less Time and Effort Troubleshooting Laptop Hardware Failures" dated April 2018. Testing ommissioned by Dell, conducted in the United States. Actual results will vary. Full report: http://facts.pt/L52XKM

Features & Technical Specifications

PRECISION 7920 TOWER

Feature	Precision 7920 Tower Technical Specifications
Processor Options	One or two Intel Xeon Scalable Processor family CPUs (1st and 2nd generation) with up to 28 cores per processor and Intel Advanced Vector Extensions, Intel Trusted Execution Technology, Intel AES New instructions, Optimized Intel Turbo Boost and optional Intel vPro™ technology
Operating System Options	Windows 10 Pro for Workstations (up to 4 Cores) Windows 10 Pro for Workstations (4 Cores Plus) Red Hat® Enterprise Linux® 7.5 Red Hat Enterprise Linux 8.0 (Sept. 2019) is required for 2nd Generation Xeon SP (Cascade Lake) CPUs Ubuntu Linux 16.4 Ubuntu Linux 18.04 NeoKylin 6.0 SP3 (China only - select options supported)
Chipset	Intel® C621 (Lewisburg)
Memory Options[1]	Six channel memory up to 1.5TB 2666MHz DDR4 ECC memory with dual CPUs, up to 3TB with select CPU SKUs Up to 768GB of 2933MHz DDR4 ECC memory 24 DIMM Slots (12 DIMMs per CPU). Note: memory speed is dependent on specific Intel Xeon Scalable Processor CPU installed
Graphics Options[1]	Support for 4 PCI Express® x16 Gen 3 graphics cards - change to up to 900W with maximum of 3 x 300W double width graphics cards in 3 slots (dual CPU configuration) and up to 2 x 375W cards (when available). 220VAC input supply recommended for 900W configurations. **High end 3D cards:** Radeon™ Pro WX 9100 Radeon™ Pro SSG NVIDIA Quadro® GV100 NVIDIA Quadro® P6000 NVIDIA Quadro® RTX 8000 (future) NVIDIA Quadro® RTX 6000 NVIDIA Quadro® RTX 5000 NVIDIA Quadro® P5000 **Mid-range 3D cards:** Radeon™ Pro WX 7100 Radeon™ Pro WX 5100 Radeon™ Pro WX 4100 NVIDIA Quadro® RTX 4000 NVIDIA Quadro® P4000 NVIDIA Quadro® P2000 **Entry 3D cards:** Radeon™ Pro WX 3100 Radeon™ Pro WX 2100 NVIDIA Quadro® P1000 NVIDIA Quadro® P620 NVIDIA Quadro® P400 **Professional 2D cards:** NVIDIA NVS 310

Feature	Precision 7920 Tower Technical Specifications
Storage Options[2]	Front accessible FlexBays support up to 4 x 2.5"/3.5" SATA HDD/SSDs and up to 8 drives with rear FlexBays populated with integrated Intel SATA controller. Up to 10 x 2.5"/3.5" SATA/SAS drives can be supported with the rear FlexBays and 5.25" bay (2 x 2.5"/3.5") populated and using the optional Broadcom MegaRAID 9460-16i controller. Up to 4 front accessible (hot plug) M.2/U.2 NVMe PCIe SSDs in FlexBays on enabled PCIe backplane chassis with integrated Intel controller (>2 drives requires dual CPUs). Up to 4 M.2/U.2 drives (1 CPU) with MegaRAID 9460 NVMe hardware RAID controller option - see controller section. Note Precision PCIe FlexBay backplane and single M.2 Module (incl. 1 M.2 PCIe NVMe carrier) kits are available for customers to convert standard FlexBays to support Intel and new MegaRAID NVMe controller options (different kits). Intel NVMe RAID 0, 1 options on 1st 2 drives only (Intel RSTe vROC). NVMe HW RAID 0,1,5,10 with MegaRAID 9460 NVME controller on up to 4 drives - single or dual CPUs.) Up to 8 x M.2 NVMe PCIe SSDs via 2 x Dell Ultra-Speed Drive Quad x16 cards (maximum requires dual CPUs), NVMe RAID 0,1,10 option on 1st card (Intel RSTe vROC). RAID 0,10 can span 2 Ultra-Speed Drive Quad x16 cards (APOS) but they cannot contain the Operating System boot drive. **M.2 NVMe PCIe SSDs** Up to 8* x 2TB drives on 2 Dell Precision Ultra-Speed Drive Quad x16 cards. Requires dual CPUs. **Front FlexBay M.2/U.2 NVMe PCIe SSDs** Up to 4 x M.2 2TB drives. Requires dual CPUs with Intel controller. **U.2 Intel® Optane™905P SSDs** Up to 4 x 960GB drives **2.5" SATA 7200 RPM** Up to 6 x 1TB **2.5" SATA SSD** Up to 10 x 1TB drives **2.5" SAS SSD** Up to 10 x 800GB drives **3.5" SATA 7200 RPM Hard Drives** Up to 10 x 12TB Enterprise Drives **3.5" SAS 7200 RPM 12Gb/s** Up to 10 x 4TB **2.5" SAS 10K RPM 12Gb/s** Up to 10 x 1.8TB **2.5" SAS 15K RPM 12Gb/s** Up to 10 x 600GB **M.2 PCIe SED SSD** 512GB and 1TB

0218

DELL Technologies

Eldorado do Sul, 5 de outubro de 2023

À
A2 INFOTECH COMERCIO E PRESTAÇÃO DE SERVIÇOS E INFORMATICA LTDA-EPP
A/C Sr. Pregoeiro

Ref: Câmara Municipal de Sorocaba | Pregão Presencial Nº 25/2023

ASSISTÊNCIAS TÉCNICAS

A **DELL COMPUTADORES DO BRASIL LTDA. ("Dell"),** inscrita no CNPJ/MF sob o nº 72.381.189/0001-10, com sede na Av. Industrial Belgraf, 400 – Medianeira – Cep 92990-000, Eldorado do Sul/RS, vem, através da presente, informar as suas assistências técnicas autorizadas:

CIDADE/ESTADO: Sorocaba/SP

Nome: Proxxi Tecnologia Ltda
CNPJ: 47379565007955
Endereço: Rua Apiai, 49 - Jardim Leocadia - Sorocaba/SP, CEP-18085350
Telefone: Milton Ribeiro Correia - (14) 99757-8659

Atenciosamente,

DELL COMPUTADORES DO BRASIL LTDA:72381189000110 Digitally signed by DELL COMPUTADORES DO BRASIL LTDA:72381189000110 Date: 2023.10.06 09:06:36 -03'00'

Dell Computadores do Brasil Ltda

Juliane Casagrande Rodrigues – Gerente de Vendas

DELL Technologies

Declaração do Fabricante

DELL COMPUTADORES DO BRASIL LTDA. ("Dell"), inscrita no CNPJ sob o n. 72.381.189/0001-10, na qualidade de fabricante do(s) equipamento(s) de marca Dell (abaixo identificado(s)), ofertado(s) pela empresa A A2 INFOTECH COMERCIO E PRESTAÇÃO DE SERVIÇOS E INFORMATICA LTDA-EPP, no certame licitatório n. 25/2023, promovido pelo **Camâra Municipal de Sorocaba**, vem, através desta, declarar que:

- o(s) modelo(s) Precision 7920 Tower possui(em) garantia de 36 meses, on-site, com atendimento telefônico **10 horas por dia, 5 dias na semana e 1 dia útil de tempo de atendimento no local.**

Declaramos, ainda, que:

- Os equipamentos por nós fabricados serão novos, sem uso e não são produtos descontinuados.

- A A2 INFOTECH COMERCIO E PRESTAÇÃO DE SERVIÇOS E INFORMATICA LTDA-EPP está autorizada a comercializar os equipamentos propostos para esse certame.

Eldorado do Sul, 5 de outubro de 2023

DELL COMPUTADORES DO BRASIL LTDA:72381189000110 Digitally signed by DELL COMPUTADORES DO BRASIL LTDA:72381189000110 Date: 2023.10.06 09:06:48 -03'00'

Dell Computadores do Brasil Ltda.
Juliane Casagrande Rodrigues – Gerente de Vendas

1 A garantia se limitará ao hardware Dell.A garantia dos Produtos de marca Dell não inclui problemas e/ou defeitos decorrentes (i) da sua instalação ou desinstalação (exceto se forem realizadas pela Dell); (ii) de seu mau uso ou uso em desacordo com as instruções contidas nos seus manuais; e/ou (iii) de seu desgaste natural. Igualmente, ainda que vigente o prazo de garantia, a Dell não terá nenhuma obrigação de reparar os Produtos de marca Dell se: (i) forem abertos, ajustados, alterados e/ou reparados por pessoas e/ou empresas não autorizadas pela Dell; (ii) não tiverem sido instalados, operados, reparados e/ou mantidos de acordo com as instruções fornecidas pela Dell; (iii) identificado que o dano decorre de software e/ou de vírus; e/ou (iv) estes não estiverem em bom estado de funcionamento devido a impactos físicos, uso indevido, negligência, acidente e/ou outros abusos, inclusive advindos de manuseio inadequado e/ou caso fortuito ou força maior. A garantia de Produtos de marca Dell limita-se aos reparos necessários para consertar defeitos que prejudiquem o seu funcionamento, excluindo-se manutenções preventivas.

0260

Pesquisar Suporte Dell

Carrinho Login

Produtos
Soluções
Serviços
Suporte
Voltar
Página de suporte
Base de conhecimento
Garantia e contratos
Chamados e status de despacho
Suporte a pedidos
Fale conosco
Comunidade

1/3 As atualizações de reparo e despacho podem ser encontradas em Status de chamados e despachos.

Entre em contato com o suporte técnico

Faça login para ver seus produtos **Fazer login**

Pesquise seu produto

Digite a etiqueta de serviço, a ID do produto ou a ID do contrato

Pesquisar

Quer procurar o seu produto? Digite um identificador do produto. Mostre-me como

Navegar em Todos os Produtos | Navegar em Meus ativos

Precisa de ajuda com qual produto?

ESTE PC

Vostro 5490
Etiqueta de serviço: 885FH73

Informe o tipo de solicitação

Selecione um item

E-mail

Preencher formulário

Envie um chamado e, em breve, um representante entrará em contato com você por e-mail.

Preencher formulário

Chat

Converse com um de nossos especialistas técnicos.

Iniciar chat

Ligação

Para ver o número de telefone, identifique o produto e selecione um dos tipos de problema acima.

Números de telefone de suporte geral

Tenha a etiqueta de serviço ou o código de serviço expresso à mão para que possamos rotear sua chamada.

Ocultar números de telefone

Serviços de hardware e software para Computadores Pessoais, Sistemas Empresarias (Desktops, Notebooks) sem garantia ou com problemas não cobertos pela garantia contratual	08009702032 Produto fora de garantia: 8am-8pm(M-F)
Equipamentos com Garantia Básica (Desktops, Notebooks, Tablets, Workstations, Dispositivos de Rede, Servidores, Armazenamento, Wyse, Outros)	08009703901 Consumidores (Pessoas Físicas): 8:00 -20:00 (Segunda-feira à Sexta-Feira, Horário de Brasília) Empresas: 8:00 – 18:00 (Segunda-feira à Sexta-Feira, Horário de Brasília)
ProSupport (Desktops, Notebooks, Tablets, Workstations, Outros) ProSupport Plus (Dispositivos de Rede, Servidores, Armazenamento, Wyse)	08007223300 24x7- 24 horas 7 dias por semana
Premium Support (Desktops, Notebooks, Tablets, Workstations, Outros) Premium Support Plus (Dispositivos de Rede, Servidores, Armazenamento, Wyse)	08007223300 24x7- 24 horas 7 dias por semana

0221

Nossas ofertas	Nossa empresa	Nossos parceiros	Recursos
APEX	Sobre a Dell Technologies	Encontre um parceiro	Eventos
Produtos	Carreiras profissionais	Localize um Varejista	Glossário
Soluções	Notícias	Fabricantes de equipamento original	Centro de privacidade
Serviços	Reciclagem de produto	Programa de parceria	Biblioteca de recursos
Promoção	Impacto social		Downloads de teste de software

Dell.com **Dell Technologies** **Premier**

 Termos e Condições Declaração de Privacidade Anúncios e e-mails

Informações Legais e Regulatórias Políticas Cumprimento dos Requisitos Regulatórios

EU DECLARATION OF CONFORMITY

Name and Address of the manufacturer:
Dell Inc.
One Dell Way
MS: PS4-30
Round Rock, Texas USA 78682

Name and address of the authorised representative:
Dell Products Europe BV
Raheen Business Park
Limerick, Ireland
Contact: https://support.dellproductcompliance.com

This declaration of conformity is issued under the sole responsibility of Dell, Inc.

OBJECT OF THE DECLARATION

Type of Object.....: Workstation
Regulatory Model.....: D04X
Regulatory Type[1].....: D04X001
Trade/Manufacturer name.: Dell

The object of the declaration described above is in conformity with the following Directives:

- DIRECTIVE 2014/53/EU OF THE EUROPEAN PARLIAMENT AND OF THE COUNCIL of 16 April 2014 on the harmonisation of the laws of the Member States relating to the making available on the market of radio equipment and repealing Directive 1999/5/EC
- DIRECTIVE 2011/65/EU OF THE EUROPEAN PARLIAMENT AND OF THE COUNCIL of 8 June 2011 on the restriction of the use of certain hazardous substances in electrical and electronic equipment.

- DIRECTIVE 2009/125/EC OF THE EUROPEAN PARLIAMENT AND OF THE COUNCIL of 21 October 2009 establishing a framework for the setting of eco design requirements for energy related products.

The object of the declaration is in compliance with the following European standards, regulations, and technical references:

SAFETY EN IEC 62368-1:2020 +A11:2020
EN 62311:2008

EMC EN 55032:2015 +A11:2020
EN 55035:2017 +A11:2020
EN 61000-3-2:2014 (Class D)
EN 61000-3-3:2013
EN 301 489-1 V2.2.3
EN 301 489-17 V3.2.4

RoHS EN IEC 63000:2018

ENERGY EN 50563:2011
EN 62623:2013
Commission Regulation (EU) No. 2019/1782

RADIO EN 300 328 V2.2.2
EN 301 893 V2.1.1
EN 300 440 V2.1.1
EN 300 330 V2.1.1

SUPPLEMENTARY INFORMATION: The object of this declaration has been tested and found to comply with the electromagnetic compatibility (EMC) limits for a Class B digital device pursuant to the listed directives, regulations

[1] Regulatory Type uniquely identifies the product Tracking Number, radio, apparatus and EEE which is the object of this DoC.

and standards. These limits are designed to provide reasonable protection against harmful interference when the equipment is operated in a residential or business environment. Optional devices, such as radios, conform to the noted standard when the Dell Inc. provided devices are installed in the product. The equipment was tested in a typical configuration.

Round Rock, Texas, USA Place of Issue	Wu, Maurice Full Printed Name
05/05/2022 Date Issue	Senior Manager, Regulatory Engineering Position/Title
D04X001-3 Dell Document Control	

Signed for and on behalf of Dell Inc.

0223

Product Compliance Datasheet

MARKETING NAME/MODEL NO.....: Precision 7920 Tower

REGULATORY MODEL.....: D04X

REGULATORY TYPE.....: D04X001

EMC EMISSIONS CLASS.....: B

EFFECTIVE DATE.....: September 19, 2017

Table of contents

I. Statement of Compliance

This product has been determined to be compliant with the applicable standards, regulations, and directives for the countries where the product is marketed. The product is affixed with regulatory marking and text as necessary for the country/agency. Dell manufacturers and markets Multimedia Equipment (MME), Information Technology Equipment (ITE), Audio Visual Equipment (A/V), Industrial, Scientific, Medical Equipment (ISM) or combinations of these. Generally, products Electromagnetic Compatibility (EMC) and Product Safety compliance is based on International IEC and CISPR standards and their national equivalent along with national standards for Radio (wireless), Telecommunications (Modem) and Energy. Dell products have been verified to comply with the Restriction of Hazardous Substances (RoHS) Directive 2011/65/EU of the European Parliament and the Council. Dell product does not contain any of the restricted substances in concentrations and applications not permitted by the RoHS Directive.

EMC Emissions Class refers to one of the following use environments:

- EMC Class B product is intended for use in residential/domestic environments but may also be used in nonresidential/non-domestic environments.
- EMC Class A product is intended for use in non-residential/non-domestic environments. Class A product may also be utilized in residential/domestic environments but may cause interference and require the user to take adequate corrective measures.

For Product Safety and EMC compliance, this product has been assigned a unique regulatory model and regulatory type that is imprinted on the product regulatory labeling to provide traceability to the regulatory approvals noted on this datasheet. This datasheet applies to any product that utilizes the assigned regulatory model and type including marketing names other than those listed on this datasheet. Dell products with the CE marking have been verified to comply with Energy Related Products (ErP) Directive 2009/125/EC of the European Parliament and of the Council. https://www.dell.com/ErP User Information. REACH (Registration, Evaluation, Authorization and Restriction of Chemicals), Regulation (EC) 1907/2006 of the European Parliament and of the Council is the European Union's (EU) chemical substances regulatory framework. Dell complies with the REACH regulation. For information on SVHC (Substances of Very High Concern), see www.dell.com/REACH. This products compliance documentation, such as this datasheet and the European Union Declaration of Conformity are available on the product support page, manuals tab http://www.dell.com/support. Additional compliance documentation for the product is available upon submitting a request at https://support.dellproductcompliance.com Please include product identifiers such as marketing name, regulatory model, regulatory type, and country that compliance information is needed in the email request.

0224

II. Global Environmental Information

Environmental (Voluntary Marks)		
Country	**Approval**	**Compliance**
Global	ENERGY STAR (Configuration Dependent)	*Computer Version8.0*
Global	TCO Certified	*Generation 8*
China	CECP	*Yes*
China	CEC	*Yes*
Japan	Green PC Label	*Yes*
Taiwan	Greenmark	*Yes*
Varies by Country See EPEAT.net	EPEAT (Configuration Dependent)	Refer to EPEAT.net for specific registration levels and countries

III. NFPA 99 Conformity

Select Dell systems have been tested and found to comply with the touch current requirements as defined in 10.3.5 of National Fire Protection Association standard NFPA 99:2012. The touch current does not exceed 100 µA with ground wire intact (if a ground wire is provided) and 500 µA with ground disconnected at 127 V AC, 60 Hz when tested in accordance with 10.3.5 of NFPA 99: 2021. To determine if this product complies with the above requirements, send a request to https://support.dellproductcompliance.com. Please include product identifiers such as marketing name, regulatory type and country for which compliance information is needed.

IV. Declaration of Similarity

Object of the Declaration	
Product Type	Workstation
Regulatory Model Number	D04X
Regulatory Type Number	D04X001
Trade Name/ Trademark	DELL
Marketing Name(s)	Precision 7920 Tower

Dell Inc. herby declares that the products identified by the product designations listed in this declaration are strictly identical in design (shape, opening, etc.) components, materials, manufacturing process, and markings except for product designation – Trade Name and/or Trade Mark as specified in this declaration.

The products may have very minor differences which do not impact the level of conformity. All products identified by the product designations in this declaration have the same level of conformity according to the certificate(s) provided.

The Trade Name / Trademark and/or Marketing Name(s) are the property of Dell Inc.
Any differences in the product designation are for marketing purposes only.

DELL

Date of Issue	September 19,2017	Signature on behalf of Dell Inc.	Dell Inc. Dell Global Product Compliance and Environmental Affairs
Title	Dell Global Product Compliance and Environmental Affairs		

V. Power Cords and User Documentation

Dell products are provided with the power cord and user documentation suitable for the intended country of delivery. Products that are relocated to other countries should use nationally certified power cords and plugs to ensure safe operation of the product. Contact Dell to determine if alternate power cords or user documentation in other languages is available for your market.

VI. Trade (Import/Export) Compliance Data

For any questions related to importing & exporting classification of Dell products, please obtain information from the following link: http://www.dell.com/learn/us/en/uscorp1/import-export or send email request to WW_Export_Compliance@dell.com. Please include product identifiers such as marketing name, regulatory model, regulatory type, and country that compliance information is needed in the email request.

VII. Product Dimensions and Weight

Depth, mm/cm	Width, mm/cm	Height, mm/cm	Weight, kg
566/56.6	218/21.8	433/43.3	20.4~33.1(depending upon installed options)

VIII. Product Energy Performance Data

ErP Lot 3, Lot 26 and ErP Lot 9 information is in Appendices A, B and C respectively.

For additional information on how Dell's commitment to energy efficiency benefits you go to: Reducing your Footprint

For additional information on ENERGY STAR models refer to the following database: ENERGY STAR Product Finder

Computer:

Service Level	Energy Consumption (Wattage)	BTU Calculation	Description of Service Level
CPU stressed	**529.15**	**1809.69**	The system is running programs to maximize the CPU utilization and/or running programs to maximize the power consumption
Short Idle	**198.6**	**587.01**	As specified per EPA ENERGY STAR

Long Idle	**197.8**	**587.01**	As specified EPA ENERGY STAR
S3 "Sleep" or Modern Standby	**11.3**	**39.51**	S3=Suspend-to-RAM, or Modern Standby
Off/Standby	**0.4**	**1.37**	System is turned off but still connected to its AC power source.

Energy Consumption[1]
Energy efficiency benefits the environment and lowers the total cost of equipment ownership by reducing power consumption. Click here for Dell's Energy efficient products.

*Energy Consumption results are based solely upon the laboratory testing of the System Configuration and in accordance to the described service level. Energy consumption is tested at 230 Volts / 50 Hz.

[1] This document is informational only and reflects laboratory performance. Your product may perform differently, depending on the software, components, and peripherals you ordered. Accordingly, the customer should not rely upon this information in making decisions about electrical tolerances or otherwise. No warranty as to accuracy or completeness is expressed or implied.
For more details visit https://www.dell.com/learn/us/en/uscorp1/dell-environment

IX. Product Materials Information

Information on Dell's material use is available here.
Dell's Restricted Material for Use guidance document is available here.

Mechanical plastic parts[1] are BFR/PVC free	☒ **Yes** ☐ **No** ☐ **NA**
Marking of plastics parts is in accordance with ISO 11469 (see below)	☒ **Yes** ☐ **No** ☐ **NA**
Printed circuit boards (without components) >0.5g are BFR PVC free [1]	☐ **Yes** ☒ **No** ☐ **NA**
Insulation materials of external electrical cables are PVC free	☐ **Yes** ☒ **No** ☐ **NA**
Product is BFR/PVC Free (Accessories & Options may not be BFR/PVC-Free	☐ **Yes** ☒ **No**
Postconsumer recycled Plastics (ITE-Derived)[1] material content is used in the product If yes, indicate the percentage of the postconsumer recycled material per total plastic weight of the product[2]	☒ **Yes** ☐ **No** ☐ **NA** **41.5 % PCR (Post Consumer Recycled) material in total plastic of product**

[1] This product contains x% post-consumer recycled plastic and/or closed loop recycled plastics (ITE-derived)*
*(Measured as a percentage of total amount of plastic (by weight) in the product as per guidance in TCO standard as applies to plastic parts.)

[2] % May be the same as declared in ENV0025 for Display

Biobased Plastic material[3] content is used in the product. If yes, either indicate the percentage of the biobased plastic material per total plastic weight of the product Or	☐ **Yes** ☒ **No** ☐ **NA** **0 % biobased plastic material in total plastic of product**

Flame Retardants Used in Motherboard

Part	List the Flame Retardants
PCB[4]	TBBP-A

Flame Retardants Used in Mechanical Plastic Parts

The case material is >ABS<

Resin Material Name	Plastic Part Marking per ISO 11469:2016	Flame Retardant Marking per ISO 1043-4 (i.e. FR(16), FR(40), etc.)	List the Flame Retardants used on (i.e. BPA, etc)	List applicable R-Phrase(s) or Hazard Statement(s) per EU Directive 67/548/EEG or 1272/2008
PC+ABS-FR(40)	>PC+ABS-FR(40)<	FR(40)	Halogen Free Organic Phosphorus compounds	R43
ABS(REC)	>ABS(REC)<	N/A	N/A	N/A
PC+ABS-FR(40)(REC)	>PC+ABS-FR(40)(REC)<	FR(40)	Halogen Free Organic Phosphorus compounds	R43

Mercury Information

Number of bulbs	Average per bulb
If none, enter 0	0 mg

Additional information:

- Refer to Dell Technologies' Chemical Use Policy for more information on RoHS and REACH.
- Products MSDS (Material Safety Data Sheets):
  - Batteries: Battery MSDS Documentation and Declaration
  - Printer Toner and Ink: MSDS Documentation

X. Packaging

Information on Dell's sustainable packaging effort available here. Additional materials restricted in

[3] Bio-based plastics are fully or partially made from biological resources, rather than fossil raw materials. They are not necessarily compostable or biodegradable. It is important to examine the full life cycle of bio-based plastics, to ensure that they are beneficial to the environment beyond the reduction in use of fossil resources. This includes littering and changes in land use

[4] A PCB is a blank circuit board with no electronic components attached

Packaging as per Dell's Material Restricted for Use Standard document can be found at www.dell.com/restrictedsubstanceslist.

Packaging Materials	Total Weight, (g)	Sustainable Material Content[1] (e.g Recycled content *,bio-based, Sustainable Forested materials)	% Sustainable Material		
			APJ region	DAO region	EMEA region
Corrugated Fiberboard	2750	Recycled Content	Min 35%	Min 35%	Min 35%
LDPE (Including EPE Foam)	670	Recycled Content	0-80%	0-80%	0%
Molded paper pulp	0	Recycled content	100%	100%	100%
HDPE (including thermoformed) *	0	Recycled Content	0-80%	0-80%	0%
Molded Bamboo	0	Non-wood, biobased material	100%	100%	100%
Wheat Straw	0	Non-wood, biobased material	100%	100%	100%
Mushroom	0	Non-wood, biobased material	100%	100%	100%
LDPE Bags	0	Recycled content	0%	0%	0%
EPS	0	Recycled content	0%	0%	0%
PET	0	Recycled content	0%	0%	0%
Polypropylene	0	Recycled content	0%	0%	0%
Other, please specify	0				

XI. Batteries

Below is a listing of batteries that could be present in the product:

Battery Description – Batteries	Battery Type	Battery Weight (kg)	Rating
CR-2032 coin cell	Lithium Metal	0.0032	10mA

XII. Design for Environment

Dell systems are, when applicable, designed for easy assembly, disassembly, and servicing. For more information on Dell's Environmental product attributes click here.

XIII. Recycling / End-of-Life Service Information

Take back and recycling services are offered for this product in certain countries. If you want to dispose of system components, please visit How to Recycle | Dell Technologies US and select the relevant country.

XIV. Helpful Links

- **Environmental Policy**
  https://i.dell.com/sites/csdocuments/Corporate_corp-Comm_Documents/en/dell-global-

environmental-policy.pdf

- **Social Impact - Progress Made Real**
  https://corporate.delltechnologies.com/en-id/social-impact.htm
- **Advancing Sustainability**
  https://corporate.delltechnologies.com/en-us/social-impact/advancing-sustainability.htm
- **ISO 14001 Certification**
  ISO Certification Certificate Environmental 14001 (delltechnologies.com)
- **Materials Restricted for Use**
  www.dell.com/restrictedsubstanceslist
- **Chemical Use Policy**
  http://i.dell.com/sites/doccontent/corporate/environment/en/Documents/chemical-use-policy.pdf
- **Product Carbon Footprint**
  https://corporate.delltechnologies.com/en-us/social-impact/advancing-sustainability/sustainable-products-and-services/product-carbon-footprints.htm
- **RoHS Compliance**
- https://dellproductcompliance.atlassian.net/servicedesk/customer/portal/6/topic/4ef197b3-28bb-4ff8-96ce-0fcb642ecf8f/article/10289411
- **REACH Compliance**
  www.dell.com/REACH
- **Recycling Information**
  http://www.dell.com/recycling
- **Supplier Responsibility – Champion the Many People**
  https://corporate.delltechnologies.com/en-us/social-impact/advancing-sustainability/champion-the-many-people.htm

0227

Appendix A: ErP Lot 3 Product Energy Consumption Information

European Union (EU) ErP Lot 3 (Commission Regulation (EC) No. 617/2013)
The ErP Lot 3 regulation includes requirements for certain product specific information to be provided by the manufacturer. This is applicable to Desktops, Integrated Desktops (All-in-One), Notebooks, Tablets, Slates, Notebook Thin Clients, Desktop Thin Clients, Workstations, Mobile Workstations, and Small-Scale Servers.

ErP Lot 3 provides certain exclusions based upon product type, screen size, and/or the amount of power consumed in idle mode. Product energy and acoustic information might be reported for products that are out of scope of ErP Lot 3 for informational purposes only.

Additional information on ErP Lot 3, Lot 7 & Lot 26 available here.

Power Supply Model #	Internal or External	Link to efficiency report
D1400EF-00	Internal	https://www.clearesult.com/80plus/sites/80plus/files/manufacturer-certificate/dell-d1400ef00-3519.pdf
H1400EF-00	Internal	https://www.clearesult.com/80plus/sites/80plus/files/manufacturer-certificate/dell-h1400ef00-3492.pdf

* **Energy Consumption** results are based solely upon the laboratory testing of the **System Configuration** listed above. Energy consumption is tested at 230 Volts / 50 Hz.

Energy Consumption[5]
Energy efficiency benefits the environment and lowers the total cost of equipment ownership by reducing power consumption. Click here for Dell's Energy efficient products

Declared Noise Emissions in accordance with ISO 9296. Testing performed in accordance with ISO 7779 at operating modes defined by ECMA 74. Your product may perform differently, depending on the software, components, and peripherals you ordered. No warranty as to accuracy or completeness is expressed or implied.

Computers Category D:

Service Level	Sound Power Declared mean A-weighted level	Statistical adder for verification	Sound Pressure Declared mean A-weighted emission level
	$L_{WA,m}$ (B)	K_V (B)	$L_{pA,m}$ (dB)
HDD Accessing	3.61	0.4	33.8
ODD Accessing	N/A	0.4	N/A
Idle	3.56	0.4	32.7

[5] This document is informational only and reflects laboratory performance. Your product may perform differently, depending on the software, components, and peripherals you ordered. Accordingly, the customer should not rely upon this information in making decisions about electrical tolerances or otherwise. No warranty as to accuracy or completeness is expressed or implied.

Appendix B: ErP Lot 26 Network Standby Energy Consumption Information

European Union (EU) ErP Lot 26 (Commission Regulation (EC) No 801/2013)
The ErP Lot 26 regulation includes Network Standby power requirements to be provided by the manufacturer. This is applicable to multiple product categories. If no information is reported, it's assumed it is out of scope of ErP Lot 26.

0223

Appendix E: France – Consumer Information about product environmental qualities and characteristics

Fiche produit relative aux qualités ou caractéristiques environnementales Product Sheet relating to Environmental Qualities or Characteristics	
(cf. Articles R. 541-221 et R. 541-222 du Code de l'environnement) (See Articles R.541-221 and R.541-222 of the Environnemental Code)	
Référence du modèle donnée par le producteur ou l'importateur (Model reference given by Producer or importer)	**D04X**
Qualité / caractéristique environnementale (Quality/Environnemental Characterisitic)	
Incorporation de matière recyclée (Incorporation of recycled material)	
Produit (Product)	Produit comportant au moins 4.1% de matières recyclées. Voir la section 'Product Materials Information' du présent document pour plus de détails (en anglais) Product containing at least 4.1% of recycled materials. See the 'Product Materials information' section of this document for more details
Emballage (Packaging)	Emballage comportant au moins 0% et jusqu'à 80% de matières recyclées. Voir la section 'Packaging' du présent document pour plus de détails (en anglais) Packaging containing at least 0% and up to 80% recycled materials. See the 'Packaging' section of this document for more details.
Batterie (Battery)	Batterie comportant au moins 0% de matières recyclées Battery with at least 0% recycled content
Recyclabilité (Recyclable)	
Produit (Product)	Produit majoritairement recyclable Majority of the Product recyclable
Emballage (Packaging)	Emballage majoritairement recyclable Majority of the Packaging recyclable
Présence de métaux précieux (Presence of Precious Metals)	Contient au moins 1 milligramme de métaux précieux Contains at least 1 milligram of precious metals
Présence de terres rares (Presence of rare earths)	Contient au moins 1 milligramme de terres rares Contains at least 1 milligram of rare earths
Présence de substances dangereuses (Presence of Hazardous substances)	Contient des substances extrêmement préoccupantes, voir www.dell.com/reach Contains Substances of Very High Concern, see www.dell.com/reach

0229

Torre Dell Precision 7920

Manual do proprietário

Modelo normativo: D04X
Tipo normativo: D04X001
Julho 2023
Rev. A09

DELL Technologies

Notas, avisos e advertências

NOTA: NOTA fornece informações importantes para ajudar você a usar melhor o computador.

CUIDADO: **Um AVISO indica possíveis danos ao hardware ou perda de dados e ensina como evitar o problema.**

ATENÇÃO: Uma ADVERTÊNCIA indica possíveis danos à propriedade, lesões corporais ou risco de morte.

Índice

1

Chassi

Este capítulo ilustra as várias vistas de chassis, junto com as portas e os conectores e também explica as combinações de teclas de atalho FN.

Tópicos:

- Vista frontal
- Vista traseira
- Vista interna
- Principais componentes do sistema

Vista frontal

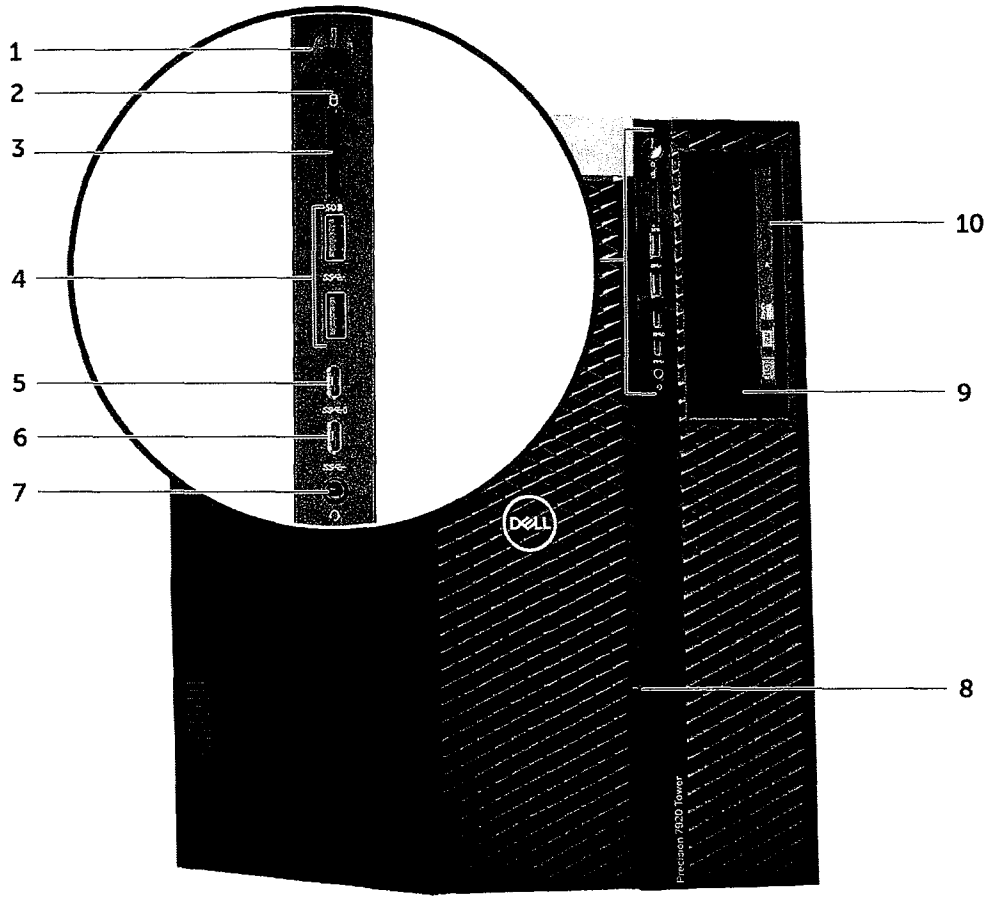

1. Botão/luz de alimentação
2. LED de atividade do disco rígido
3. slot de cartão SD
4. Portas USB 3.2 1ª geração
5. Porta USB 3.2 Type-C com PowerShare
6. Porta USB 3.2 Type-C
7. Tomada universal de áudio
8. Trava de liberação da tampa frontal

9. Compartimento da unidade de disco óptico de 5,25"
10. Compartimento óptico slimline

Vista traseira

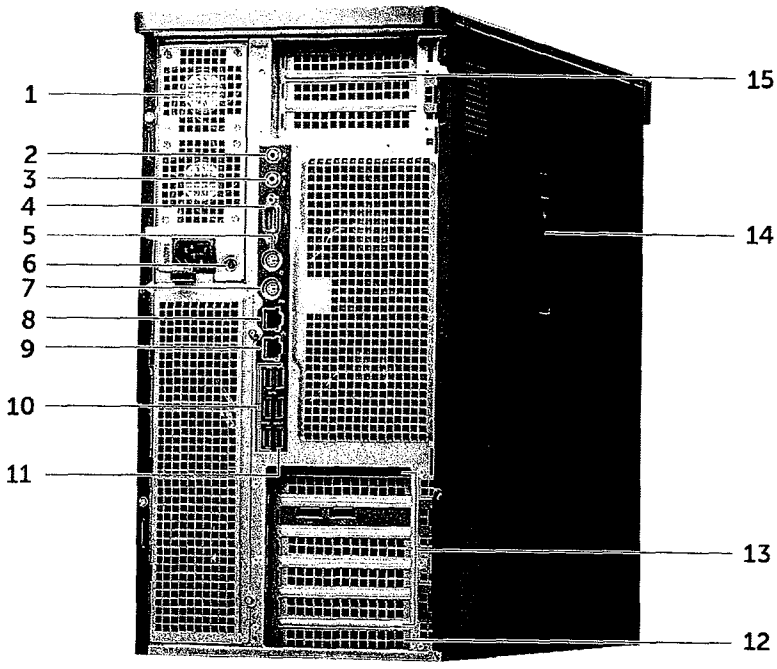

1. Unidade da fonte de alimentação
2. Porta de saída de linha
3. Porta do microfone/entrada de linha
4. Porta serial
5. Porta do mouse PS/2
6. LED de BIST da fonte de alimentação
7. Porta do teclado PS/2
8. Porta de rede (compatível com AMT: opcional)
9. Porta de rede
10. Portas USB 3.2 1ª geração
11. Porta USB 3.2 Type-C com PowerShare
12. Slot de expansão mecânico
13. Slots de expansão para PCIe
14. Trava de liberação da tampa lateral
15. Slots de expansão para PCIe (CPU1 necessária)

Vista interna

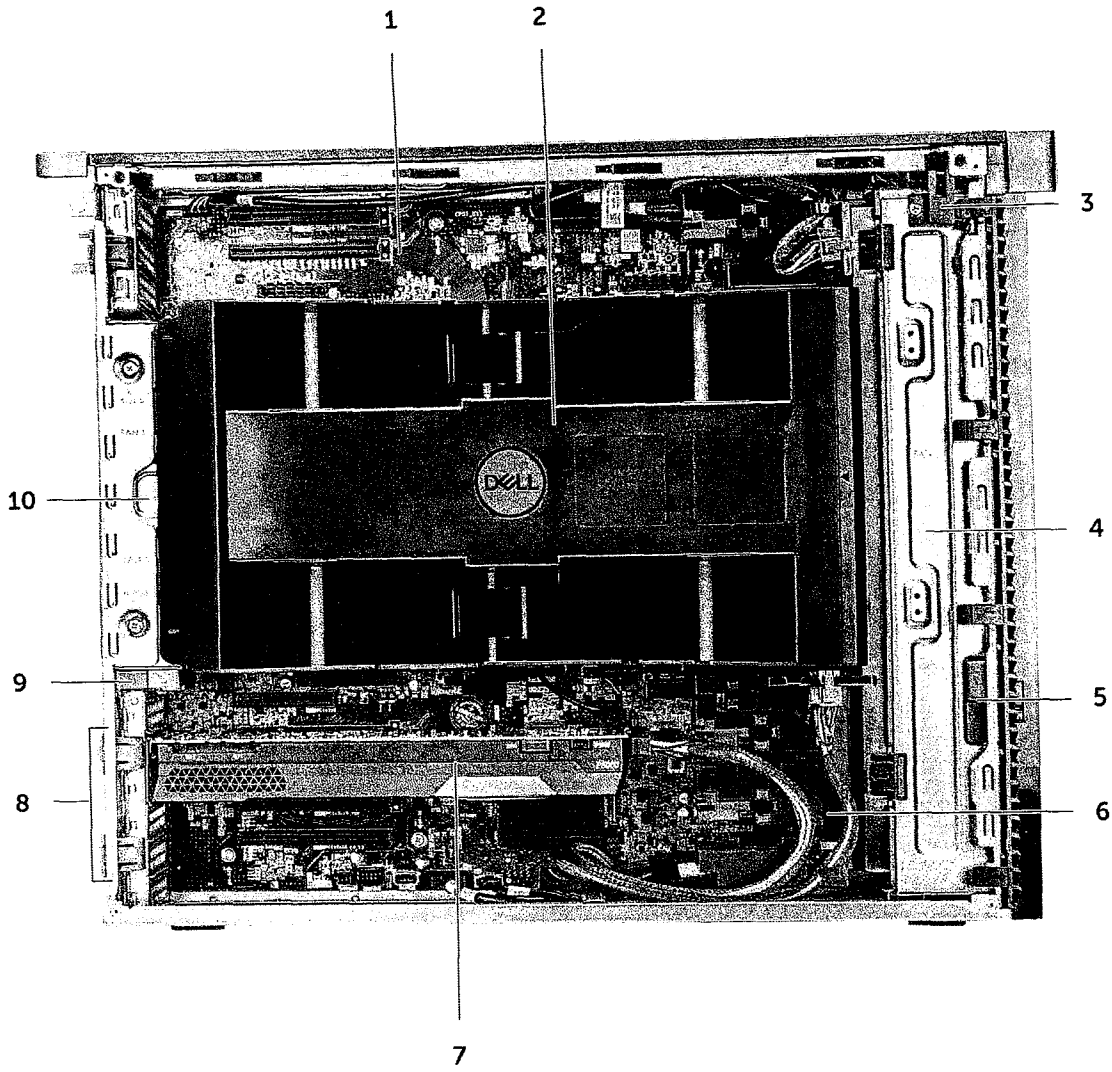

1. Placa de sistema
2. Defletor de ar da CPU e da memória
3. Sensor de violação
4. Conjunto do ventilador frontal do sistema
5. Botão de travar/destravar o bezel frontal
6. Cabos de alimentação PCIe auxiliares
7. Unidade de processamento gráfico (GPU) energizada
8. Travas de liberação PCIe
9. Botão de travar/destravar o bezel do HDD traseiro
10. Ventiladores traseiros

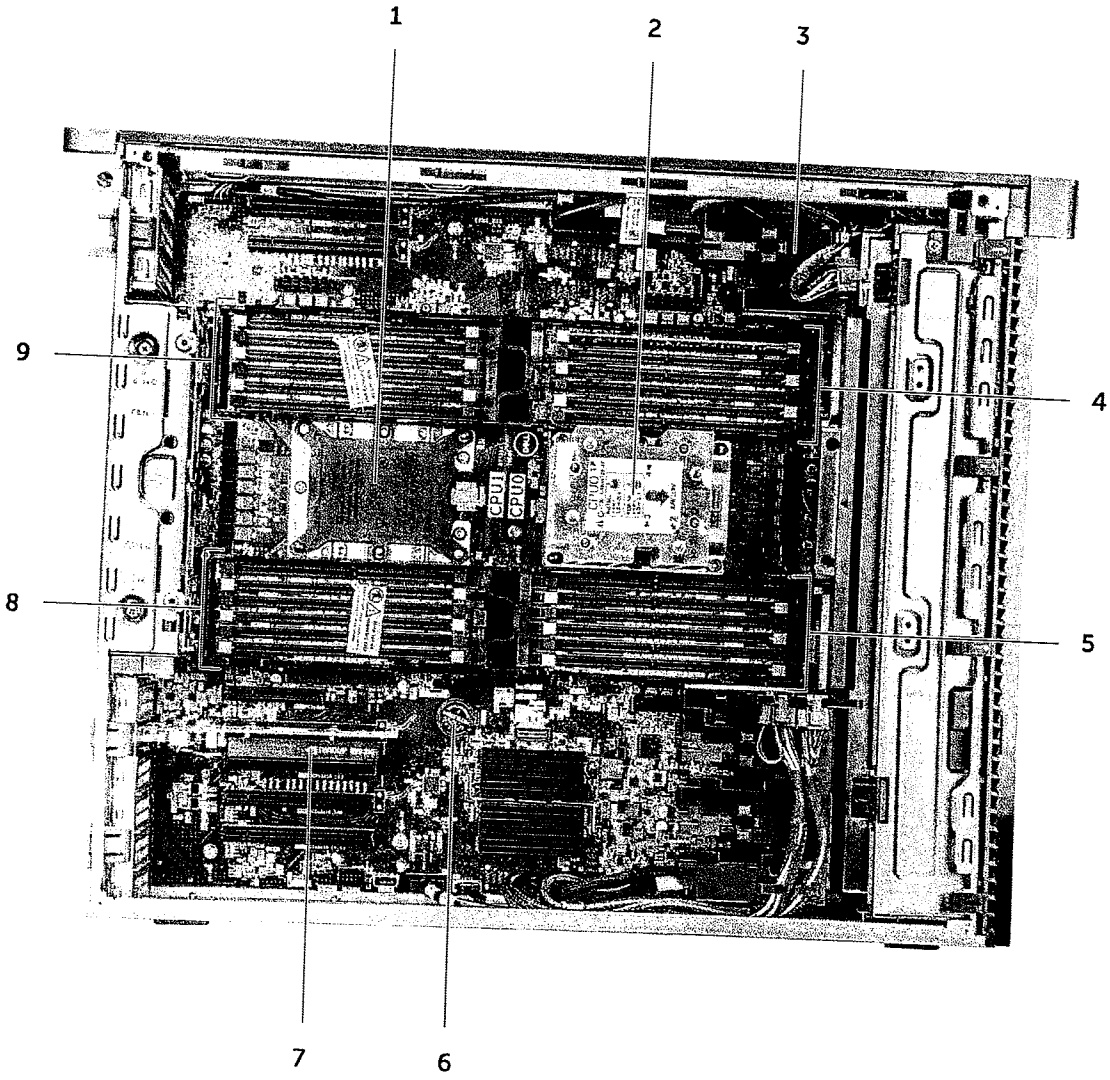

1. soquete da CPU1
2. Dissipador de calor da CPU0
3. Suporte da placa PCIe
4. Slots de memória da CPU0
5. Slots de memória da CPU0
6. Bateria de célula tipo moeda
7. Placa gráfica PCIe de meio comprimento
8. Slots de memória da CPU1
9. Slots de memória da CPU1

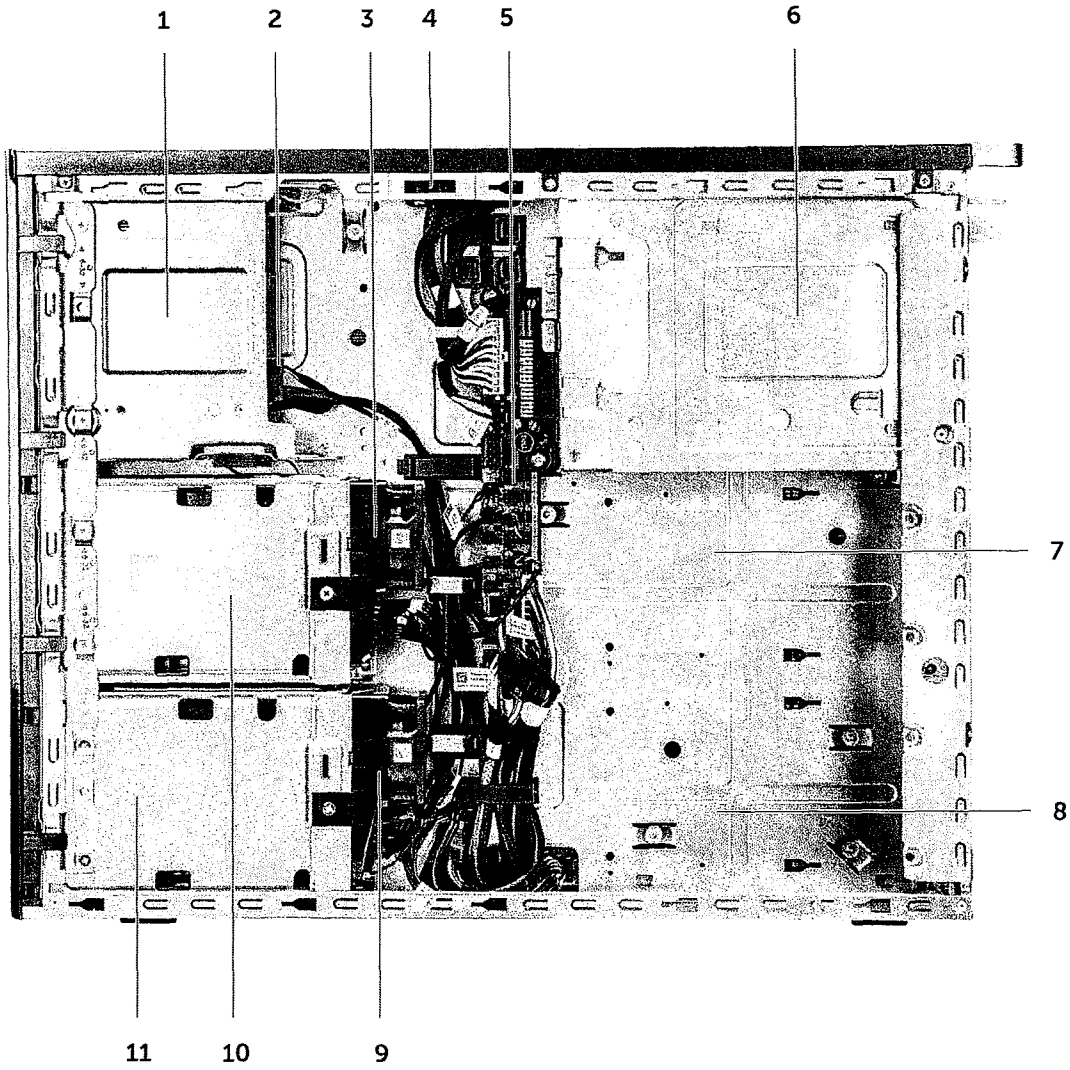

1. Flex 2 (o padrão é compartimento de ODD slim e de 5,25")
2. Cabo de dados e cabo de alimentação da ODD slim
3. Suporte de ventilador de HDD 1
4. Sensor de violação
5. Placa de controle do ventilador e distribuição de energia
6. Fonte de alimentação
7. Flex 3 (opcional)
8. Flex 4 (opcional)
9. Suporte 0 de ventilador de HDD
10. Invólucro do Flex 1
11. Invólucro flexível 0

Principais componentes do sistema

Esta seção ilustra os principais componentes do seu sistema e sua localização.

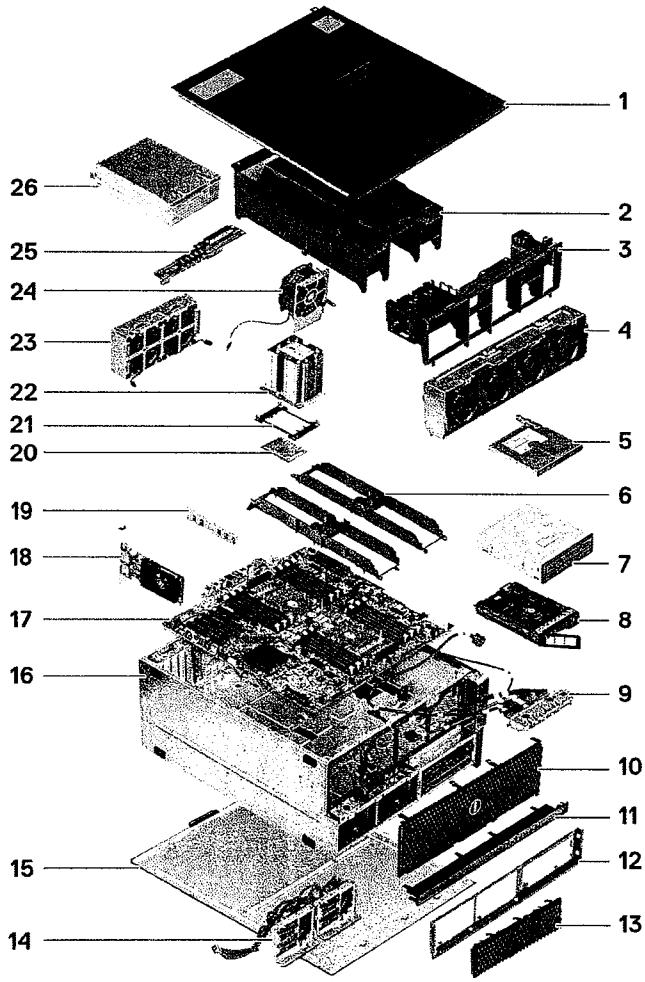

1. Tampa lateral
2. Defletor de ar
3. Suporte da PCIe
4. Conjunto do ventilador frontal do sistema
5. Unidade de disco óptica slim
6. Suporte de memória
7. Unidade de disco óptico de 5,25 polegadas
8. NVMe Flexbay
9. Painel de entrada e saída frontal
10. Painel frontal
11. Painel de entrada e saída frontal
12. Moldura da unidade de disco rígido e da unidade óptica
13. Bezel da unidade de disco rígido
14. Backpane e cabos drop
15. Tampa lateral direita
16. Chassi do computador
17. Placa de sistema
18. Placa de expansão
19. Memória
20. Processador
21. Clipe de travamento da CPU
22. Módulo do dissipador de calor do processador
23. Ventilador frontal do sistema
24. Ventilador do sistema
25. Placa de distribuição de energia

26. Fonte de alimentação (PSU)

NOTA: A Dell fornece uma lista de componentes e seus números de peça para a configuração original do sistema adquirida. Essas peças são disponibilizadas de acordo com as coberturas de garantia adquiridas pelo cliente. Entre em contato com o representante de vendas Dell para obter as opções de compra.

2

Como trabalhar no computador

Tópicos:

- Instruções de segurança
- Como desligar seu computador — Windows
- Antes de trabalhar na parte interna do computador
- Após trabalhar na parte interna do computador

Instruções de segurança

Use as diretrizes de segurança a seguir para proteger o computador contra possíveis danos e garantir sua segurança pessoal. A menos que indicado de outra forma, cada procedimento incluído neste documento pressupõe que você leu as informações de segurança fornecidas com o computador.

ATENÇÃO: Antes de trabalhar na parte interna do computador, leia as informações de segurança fornecidas com o computador. Para obter informações adicionais sobre as melhores práticas de segurança, consulte a página inicial de Conformidade de normalização em www.dell.com/regulatory_compliance.

ATENÇÃO: Desconecte o computador de todas as fontes de energia antes de abrir a tampa ou os painéis do computador. Depois que terminar de trabalhar na parte interna do computador, recoloque todas as tampas, painéis, e parafusos antes de conectar o computador a uma fonte de alimentação.

CUIDADO: **Para evitar danos ao computador, certifique-se de que a superfície de trabalho seja plana e esteja seca e limpa.**

CUIDADO: **Para evitar danos aos componentes e placas, segure-os pelas bordas e evite tocar nos pinos e contatos.**

CUIDADO: **Você deve somente resolver problemas ou efetuar consertos simples conforme autorizado ou direcionado pela equipe de assistência técnica da Dell. Danos decorrentes de mão-de-obra não autorizada pela Dell não serão cobertos pela garantia. Consulte as instruções de segurança fornecidas com o produto ou em www.dell.com/regulatory_compliance.**

CUIDADO: **Antes de tocar em qualquer componente na parte interna do computador, elimine a eletricidade estática de seu corpo tocando em uma superfície metálica sem pintura, como o metal da parte posterior do computador. Enquanto trabalha, toque periodicamente em uma superfície metálica sem pintura para dissipar a eletricidade estática, que poderia danificar componentes internos.**

CUIDADO: **Ao desconectar um cabo, puxe-o pelo conector ou pela aba de puxar, e não pelo próprio cabo. Alguns cabos possuem conectores com presilhas ou parafusos borboleta que você precisará soltar antes de desconectar o cabo. Ao desconectar os cabos, mantenha-os alinhados para evitar entortar os pinos do conector. Ao conectar cabos, certifique-se de que as portas e conectores estão corretamente orientados e alinhados.**

CUIDADO: **Pressione e ejete os cartões instalados no leitor de cartão de mídia.**

CUIDADO: **Tenha cuidado ao manusear baterias de íons de lítio em notebooks. Baterias inchadas não devem ser usadas e devem ser substituídas e descartadas adequadamente.**

NOTA: A cor do computador e de determinados componentes pode ser diferente daquela mostrada neste documento.

Como desligar seu computador — Windows

CUIDADO: **Para não perder dados, salve e feche todos os arquivos abertos e saia dos programas abertos antes de desligar o computador ou remova a tampa lateral.**

1. Clique ou toque no ícone .
2. Clique ou toque no ícone e, em seguida, clique ou toque em **Desligar**.

   NOTA: Certifique-se de que o computador e todos os dispositivos conectados estão desligados. Se o computador e os dispositivos conectados não tiverem sido desligados automaticamente quando você desligou o sistema operacional, mantenha o botão liga/desliga pressionado por cerca de 6 segundos para desligá-los.

Antes de trabalhar na parte interna do computador

NOTA: As imagens neste documento podem diferir do seu computador, dependendo da configuração que você encomendou.

1. Salve e feche todos os arquivos abertos e saia de todos os aplicativos abertos.
2. Desligue o computador. Para sistema opercaional Windows, clique em **Iniciar** > **Liga/desliga** > **Desligar**.

   NOTA: Se estiver usando um sistema operacional diferente, consulte a documentação de seu sistema operacional para obter instruções de desligamento.
3. Desconecte o computador e todos os dispositivos conectados de suas tomadas elétricas.
4. Desconecte todos os dispositivos de rede e periféricos conectados ao computador, como o teclado, mouse, monitor e assim por diante.

   CUIDADO: **Para desconectar um cabo de rede, primeiro desconecte-o do computador e, em seguida, desconecte-o do dispositivo de rede.**
5. Remova qualquer placa de mídia e de disco óptico do computador, se aplicável.

Após trabalhar na parte interna do computador

NOTA: Deixar parafusos soltos na parte interna do computador pode danificar gravemente o computador.

1. Recoloque todos os parafusos e verifique se nenhum parafuso foi esquecido dentro do computador.
2. Conecte todos os dispositivos externos, periféricos e cabos que removeu antes de trabalhar no computador.
3. Recoloque todas as placas de mídia, discos e quaisquer outras peças que tenham sido removidas antes de trabalhar no computador.
4. Conecte o computador e todos os dispositivos conectados às suas tomadas elétricas.
5. Ligue o computador.

3

Como remover e instalar componentes

Tópicos:

- Lista de tamanhos de parafusos
- Ferramentas recomendadas
- Fonte de alimentação (PSU)
- Tampa lateral
- Defletor de ar
- Tampa frontal
- Suporte da PCIe
- Sensor de violação
- Conjunto do ventilador frontal do sistema
- Alto-falante do chassi interno
- Bezel do disco rígido e da unidade óptica
- Conjunto da unidade do disco rígido
- NVMe Flexbay
- Bezel de entrada e saída frontal
- Painel frontal de entrada e saída
- Ventilador traseiro do sistema
- Tampa lateral direita
- Moldura da unidade de disco rígido e da unidade óptica
- Unidade óptica fina
- Unidade óptica de 5,25 polegadas
- Placa de controle do ventilador e distribuição de energia
- Cabo do HDD frontal e conjunto montado do ventilador
- Suporte do ventilador
- Unidade de processamento gráfico (GPU)
- Memória
- Bateria de célula tipo moeda
- Módulo do dissipador de calor do processador
- Placa de sistema
- Bateria da controladora RAID
- Módulo VROC

Lista de tamanhos de parafusos

Tabela 1. Lista de parafusos

Componente	Tipo do parafuso	Quantidade
Placa de PSU estendida	#6-32X com 1/4 de polegada	3
Placa FIO	#6-32X com 1/4 de polegada	2
Cabo de ODD slim para acoplamento cego	M3X5.0mm	2
Cabo de ODD slim para acoplamento cego com suporte de ODD	#6-32 UNC X5.45mm	1
Suporte FIO	#6-32X com 1/4 de polegada	1
Tampa lateral direita	#6-32 UNC X7.0mm	2

0237

Tabela 1. Lista de parafusos (continuação)

Componente	Tipo do parafuso	Quantidade
Defletor de ar inferior com direcionamento de ar para cima	M3X5.0mm	3
Defletor de ar inferior com direcionamento de ar para baixo	M3X5.0mm	2
Placa-mãe	#6-32X com 1/4 de polegada	12
Suporte de ventilador frontal: bandeja de MB	#6-32X com 1/4 de polegada	2
Suporte de ventilador frontal: parede frontal	#6-32X com 1/4 de polegada	2
Suporte do módulo de violação	#6-32X com 1/4 de polegada	1
Suporte do ventilador traseiro	#6-32X com 1/4 de polegada	2
Tampa traseira do HDD	#6-32 UNC X7.0mm	2
Suporte do compartimento de HDD Flex0	#6-32 UNC X5.45mm	4
Suporte do ventilador 6025 do compartimento Flex0 para cabo conectado	#6-32 UNC X5.45mm	2
Suporte do ventilador 6025 do compartimento Flex0 para conector automático	#6-32 UNC X5.45mm	2
Suporte de ODD de meia altura dos compartimentos Flex0 e Flex1	#6-32 UNC X5.45mm	4
Suporte do compartimento de HDD Flex1	#6-32 UNC X5.45mm	4
Suporte do ventilador 6025 do compartimento Flex1 para cabo conectado	#6-32 UNC X5.45mm	2
Suporte do ventilador 6025 do compartimento Flex1 para conector automático	#6-32 UNC X5.45mm	2
Suporte do compartimento de HDD Flex2	#6-32 UNC X5.45mm	4
Suporte do ventilador 6025 do compartimento Flex2 para cabo conectado	#6-32 UNC X5.45mm	2
Suporte de HDD do compartimento Flex3	#6-32 UNC X5.45mm	4
Suporte do ventilador 6025 do compartimento Flex3 para cabo conectado	#6-32 UNC X5.45mm	2
Suporte de HDD do compartimento Flex4	#6-32 UNC X5.45mm	4
Suporte do ventilador 6025 do compartimento Flex4 para cabo conectado	#6-32 UNC X5.45mm	2
Suporte da ODD de meia altura	M3X5.0mm	4
Placa HSBP	#6-32 UNC X5.45mm	3
Resfriamento da CPU0/resfriamento líquido da CPU0	Pino de metal Torx T-30	4
Resfriamento da CPU1/resfriamento líquido da CPU1	Pino de metal Torx T-30	4
Suporte de resfriamento líquido	#6-32 UNC X5.45mm	12

Ferramentas recomendadas

Os procedimentos descritos neste documento podem exigir as seguintes ferramentas:

- Chave Phillips nº 0
- Chave de fenda Phillips nº 1
- Chave Phillips nº 2
- Estilete de plástico — recomendado para técnico em campo
- Chave de fenda torx T-30

Fonte de alimentação (PSU)

Como remover a PSU

1. Siga o procedimento descrito em Antes de trabalhar na parte interna do computador.
2. Desconecte o cabo de alimentação do sistema.
3. Pressione a trava de liberação da PSU [1] e remova a fonte de alimentação do sistema [2].

   NOTA: Se a PSU não puder ser removida, remova a tampa lateral direita do sistema e verifique se a PSU está presa com um parafuso.

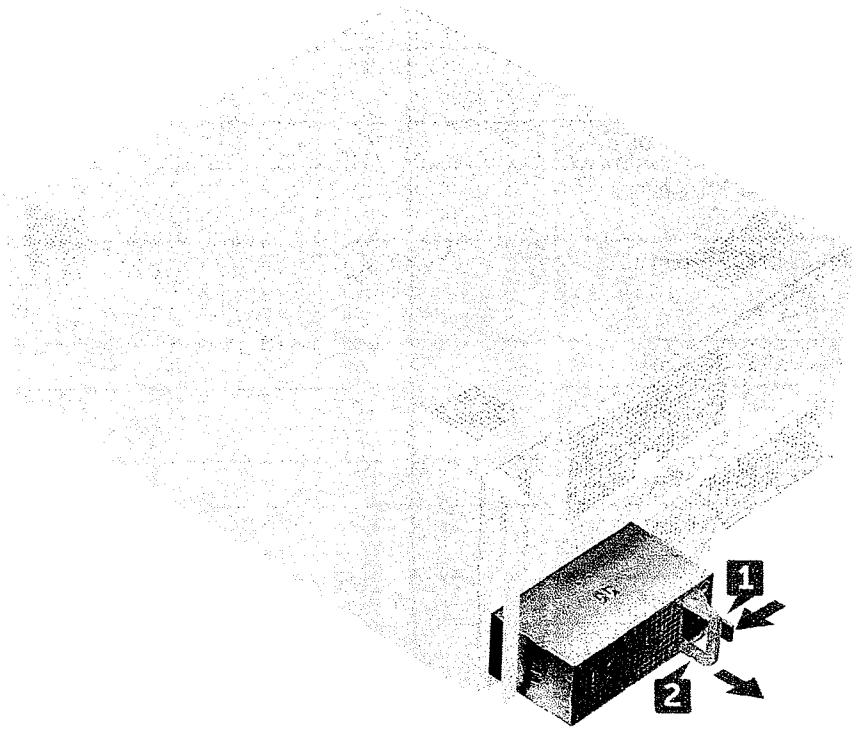

Como instalar a PSU

1. Deslize a unidade de fonte de alimentação para o slot da PSU no sistema.
2. Conecte o cabo de alimentação ao sistema.
3. Siga o procedimento descrito em Após trabalhar na parte interna do computador.Após trabalhar na parte interna do computador

Tampa lateral

Como remover a tampa lateral

1. Siga o procedimento descrito em Antes de trabalhar na parte interna do computador.

   CUIDADO: **O sistema não ligará enquanto a tampa lateral estiver fora do lugar. Além disso, o sistema será desligado se a tampa lateral for removida enquanto o sistema estiver ligado.**

2. Para remover a tampa lateral:
3. Pressione a trava

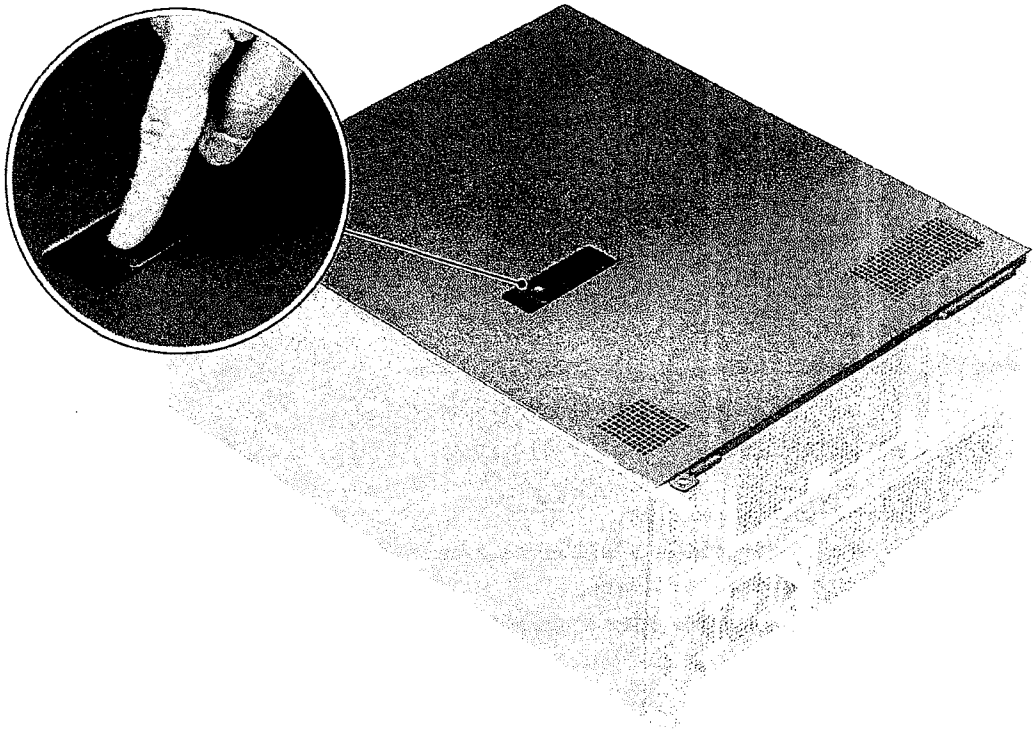

4. Puxe a trava [1] para cima e gire-a para liberar a tampa [2].

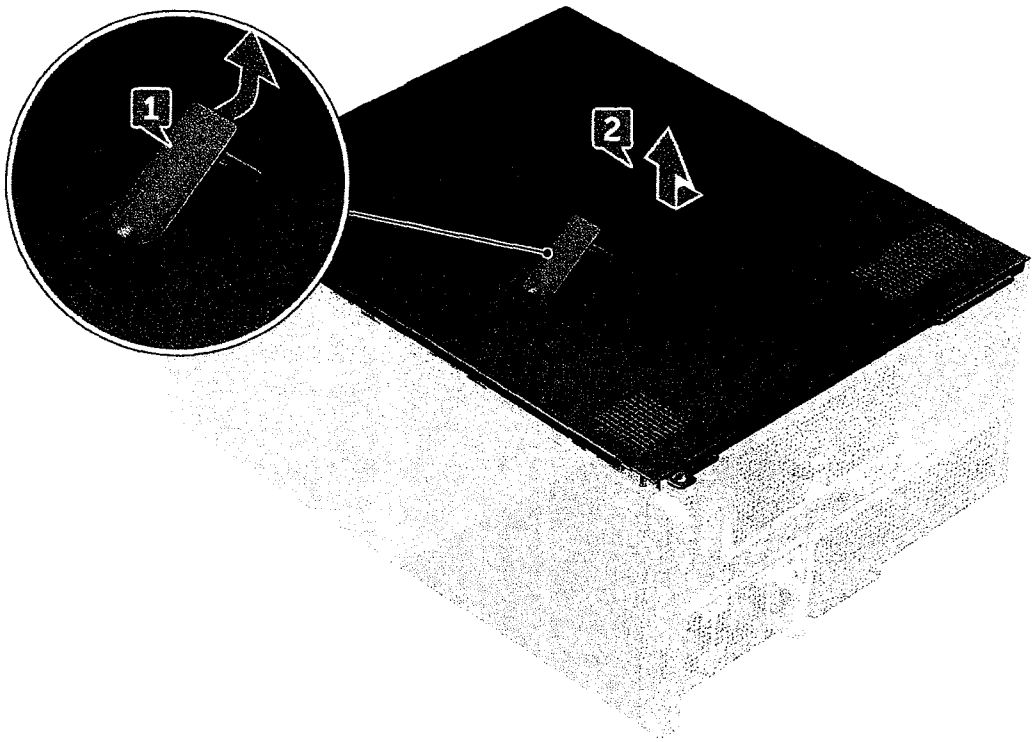

5. Levante a tampa para removê-la do sistema.

Como instalar a tampa lateral

1. Primeiro, segure e alinhe a parte inferior da tampa lateral ao chassi.
2. Certifique-se de que o gancho na parte inferior da tampa lateral se encaixe no entalhe no sistema.
3. Pressione a tampa do sistema até que ela encaixe no lugar com um clique.

   CUIDADO: **O sistema não ligará sem a tampa lateral. Além disso, o sistema será desligado se a tampa lateral for removida enquanto o sistema estiver ligado.**

4. Siga o procedimento descrito em Após trabalhar na parte interna do computador.

Defletor de ar

Como remover o defletor de ar

1. Siga o procedimento descrito em Antes de trabalhar na parte interna do computador.
2. Remova a tampa lateral.
3. Para remover o conjunto montado do ventilador do defletor de ar:
   a. Desconecte o cabo do conector do ventilador da placa de sistema [1].
   b. Retire o defletor do sistema [2].

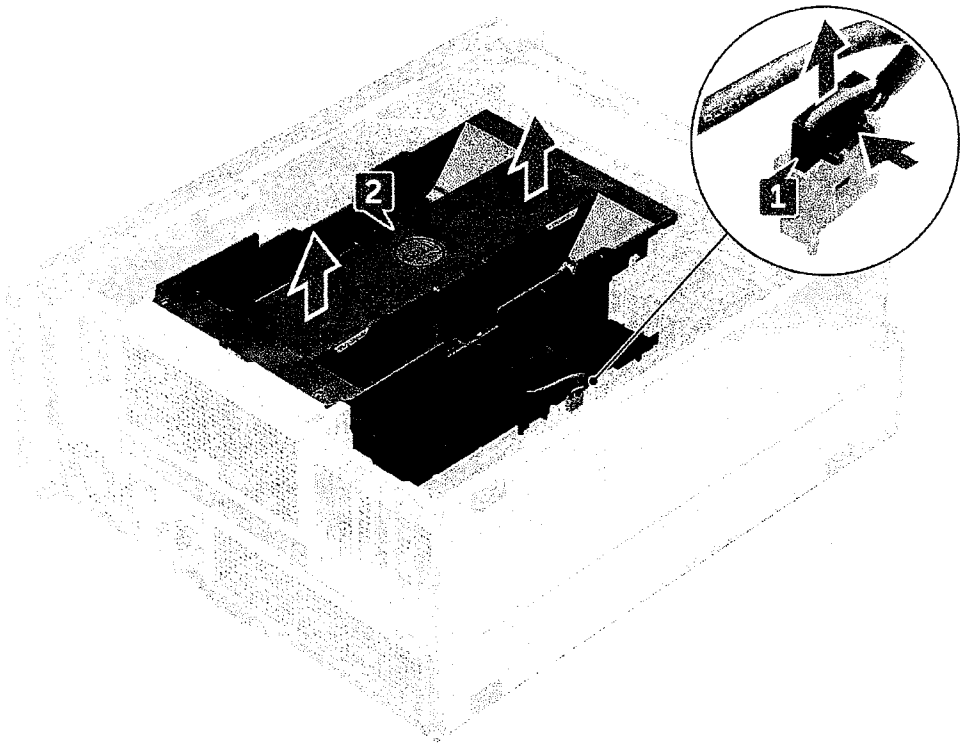

Como instalar o conjunto montado do ventilador do defletor ar

1. Posicione o defletor em sua respectiva posição e certifique-se de que a aba esteja encaixada no sistema.
2. Pressione o defletor para abaixo até travá-lo com um clique.
3. Reconecte o cabo do conector do ventilador à placa de sistema.
4. Instale a tampa lateral.
5. Siga o procedimento descrito em Após trabalhar na parte interna do computador.

Como remover o ventilador com defletor de ar

1. Siga o procedimento descrito em Antes de trabalhar na parte interna do computador.
2. Remova a/o:
   a. tampa lateral
   b. como remover o defletor de ar (superior)
3. Vire o defletor para ver o ventilador.
4. Para remover o ventilador, solte o cabo do conector do ventilador que está preso às travas [1] e [2].

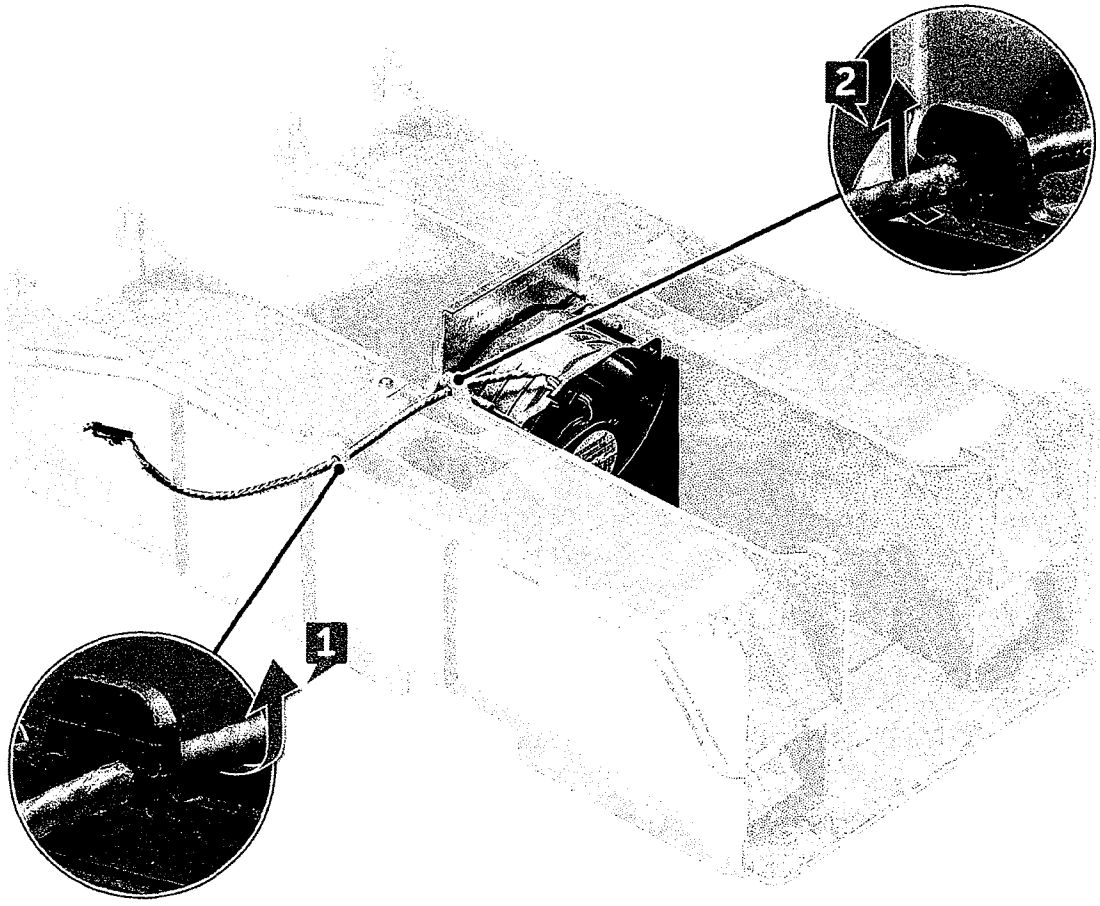

5. Remova os parafusos que prendem o ventilador ao defletor de ar [1] e, em seguida, retire o ventilador do defletor de ar [2].

   ⓘ **NOTA:** O defletor precisará ser levemente aberto para possibilitar sua remoção.

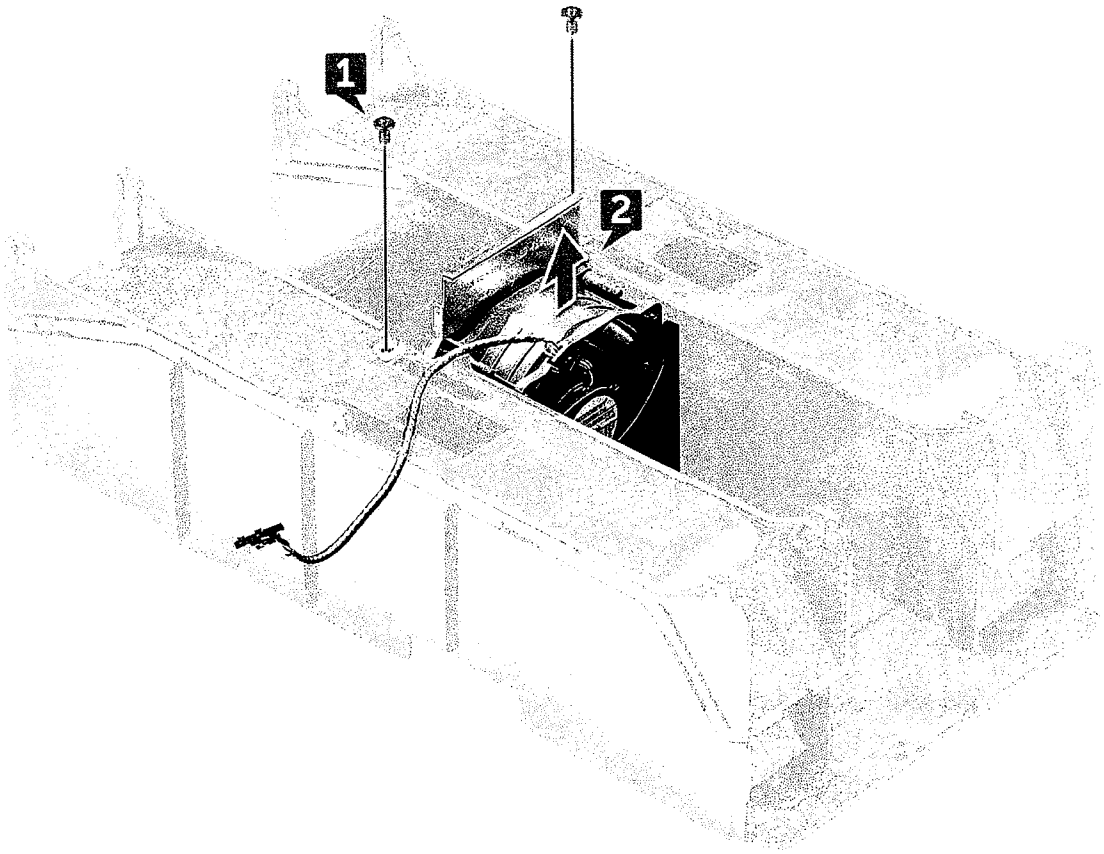

Como instalar o ventilador com defletor de ar

1. Coloque o ventilador em sua posição no interior do defletor de ar.
2. Recoloque os parafusos que prendem o ventilador ao defletor de ar.
3. Passe de volta o cabo do conector do ventilador pelas travas no defletor de ar e vire ao contrário.
4. Instale:
   a. defletor de ar (superior)
   b. tampa lateral
5. Siga o procedimento descrito em Após trabalhar na parte interna do computador.

Tampa frontal

Como remover a tampa frontal

1. Siga o procedimento descrito em Antes de trabalhar na parte interna do computador.
2. Remova a tampa lateral.
3. Para remover o painel frontal:
   a. Pressione a trava e levante as presilhas de retenção para liberar a o painel frontal do sistema.

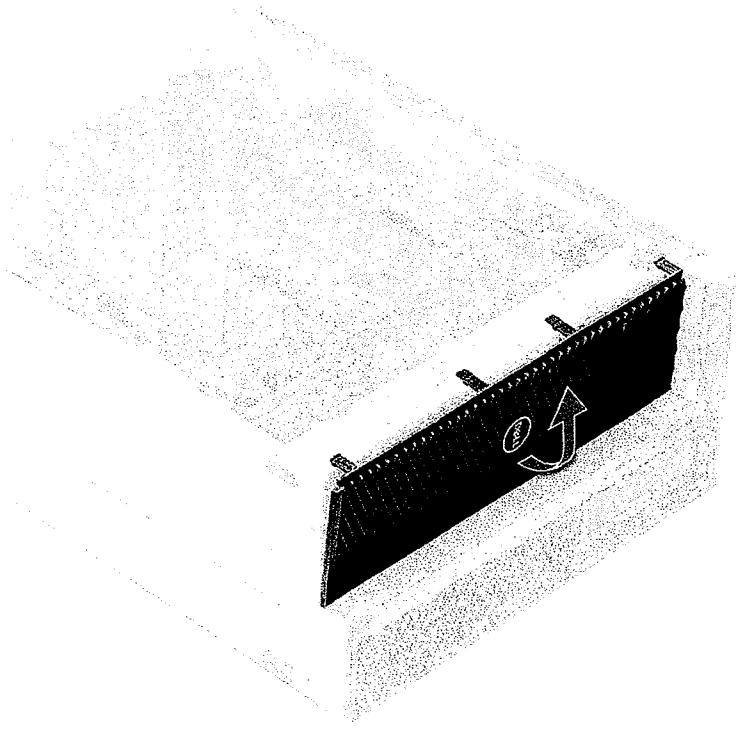

b. Gire o bezel para frente e remova o bezel frontal do sistema.

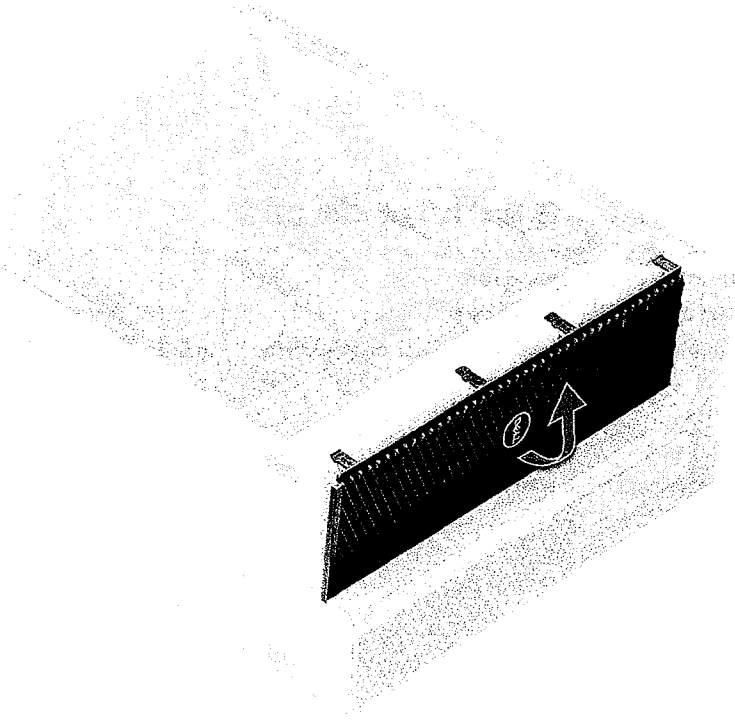

Instalar a tampa frontal

1. Segure o bezel e certifique-se de que os ganchos no bezel se encaixam nos entalhes do sistema.
2. Gire o bezel para frente e pressione o bezel frontal até que as abas encaixem no lugar.
3. Siga o procedimento descrito em Após trabalhar na parte interna do computador.

Suporte da PCIe

Como remover o suporte da placa PCIe

1. Siga o procedimento descrito em Antes de trabalhar na parte interna do computador.
2. Remova o seguinte:
   a. tampa lateral
   b. defletor de ar
3. Para remover o suporte da placa PCIe:

   NOTA: Se placas de altura completa já estiverem instaladas, você deverá removê-las antes de retirar o suporte.

   NOTA: Se a placa MegaRAID 9460 já estiver instalada, desconecte o Super CAP da placa antes de remover o suporte da placa PCIe do sistema.

   a. Para desconectar os cabos de alimentação nas duas laterais do suporte da placa, pressione a aba e solte-a do slot de cabo no suporte da placa PCIe [1] e [2].
   b. Solte os dois cabos que passam pelo clipe no suporte da placa [3].

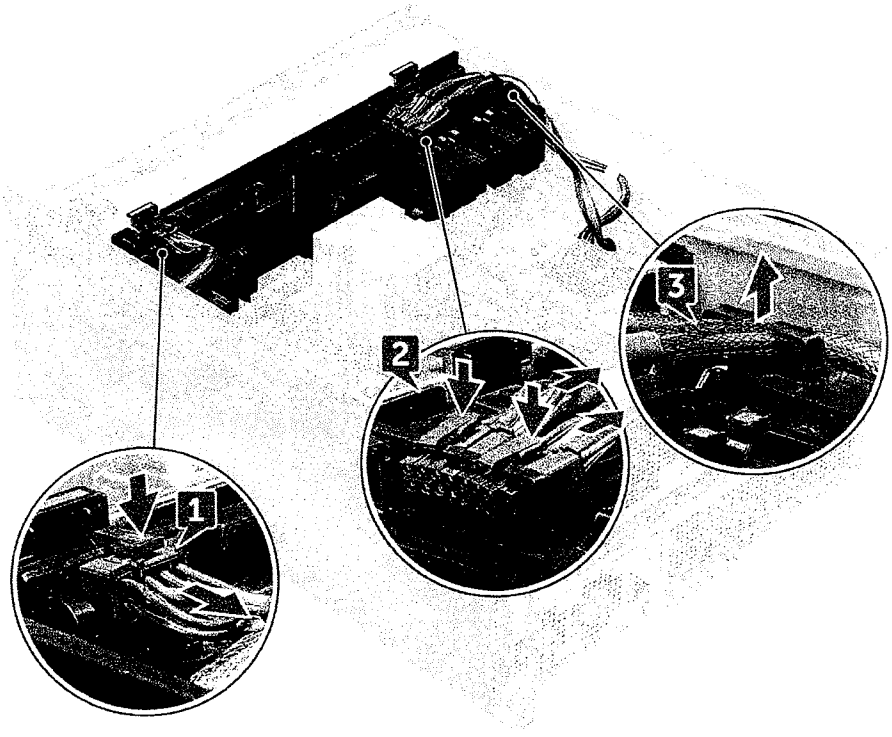

4. Solte as travas que conectam o conjunto do ventilador frontal do sistema e, em seguida, retire o suporte da placa PCIe do chassi.

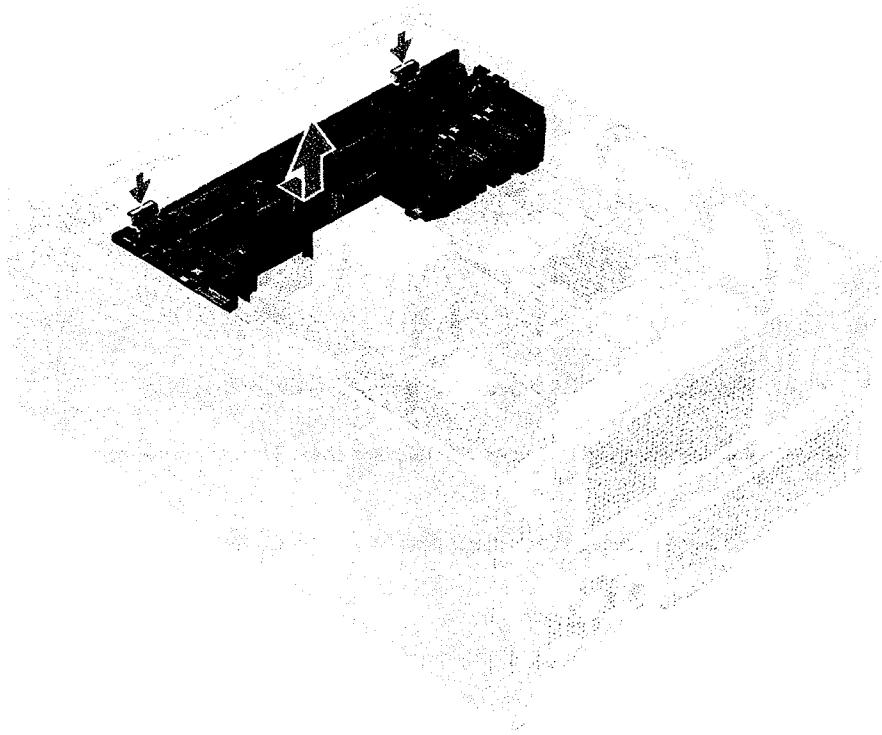

Instalar o suporte da placa PCIe

1. Alinhe o suporte da placa PCIe ao slot na parte frontal do conjunto do ventilador do sistema e, em seguida, pressione para baixo encaixá-lo no lugar.
2. Passe novamente os dois cabos pelo clipe no suporte da placa PCIe.
3. Conecte os cabos de alimentação nas laterais aos slots de cabo no suporte da placa PCIe.
4. Reinstale as placas de comprimento completo, caso tenham sido removidas.
5. Se o MegaRAID 9460 foi removido, reconecte o Super CAP à placa.
6. Instale:
   a. defletor de ar
   b. tampa lateral
7. Siga o procedimento descrito em Após trabalhar na parte interna do computador.

Sensor de violação

Remover a chave de violação

1. Siga o procedimento descrito em Antes de trabalhar na parte interna do computador.
2. Remova a tampa lateral direita.
3. Para remover o sensor de violação que está localizado na parte inferior da placa de sistema:

   NOTA: O sistema não ligará enquanto o sensor de violação não for instalado.

   a. Pressione o botão do sensor de violação em direção à parte inferior do chassi [1, 2].
   b. Puxe o sensor de violação para baixo para removê-lo do slot [3].

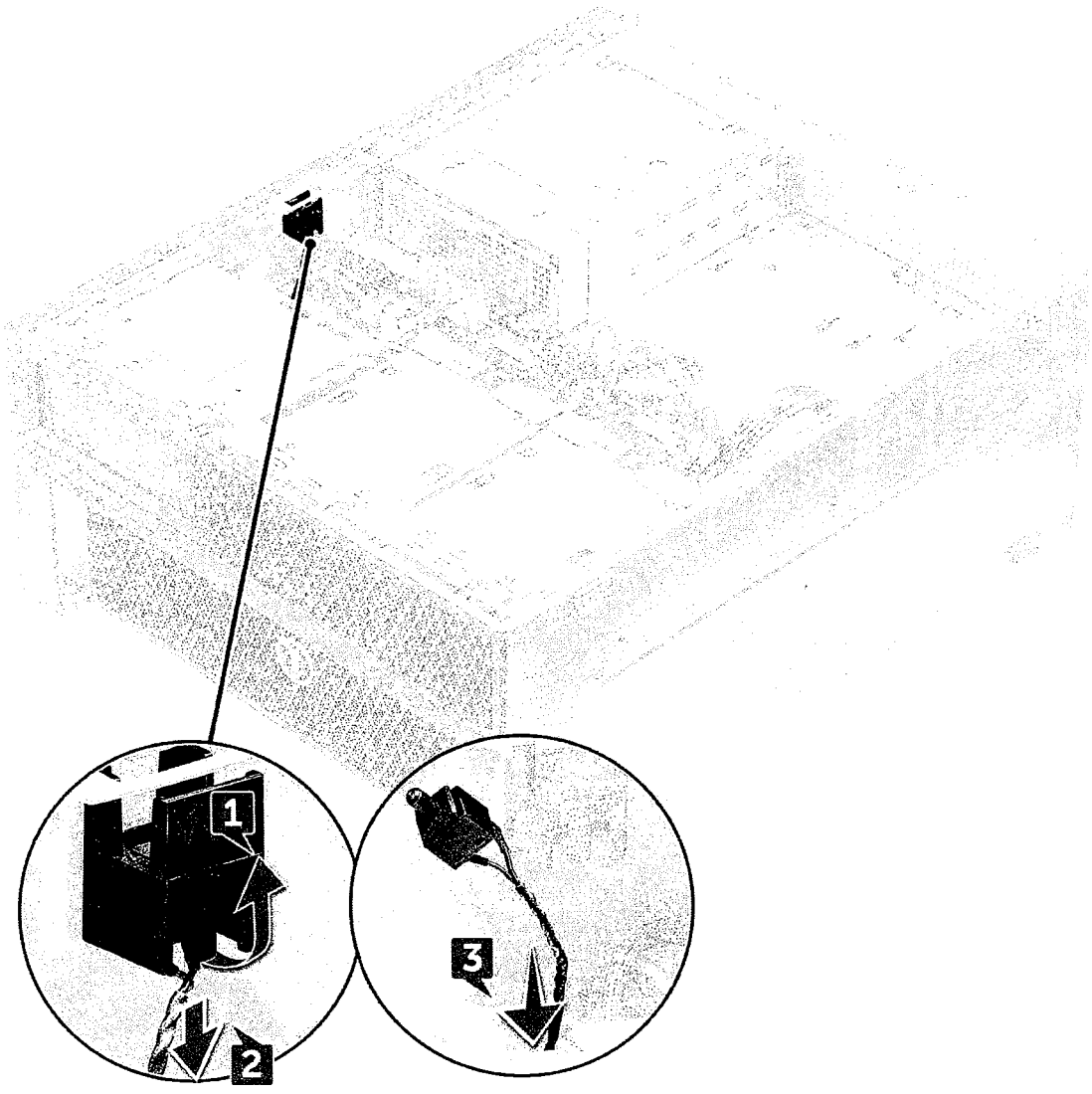

4. Instale a tampa lateral direita
5. Vire o sistema novamente, posicionando a tampa do sistema voltada para cima, que é onde está localizada a trava de liberação.
6. Remova os seguintes componentes:
   a. tampa lateral
   b. defletor de ar
   c. suporte da placa PCIe
7. Para remover o módulo do sensor de violação:
   a. Puxe o cabo do sensor de violação inferior em direção ao chassi [1].
   b. Pressione a aba para desconectar o cabo do sensor de violação da placa de sistema [2].
   c. Passe os cabos do sensor de violação pelo clipe no chassi para removê-los [3].
   d. Remova o parafuso do módulo de violação [4].
   e. Retire o módulo de violação do conjunto do ventilador frontal do sistema [5].

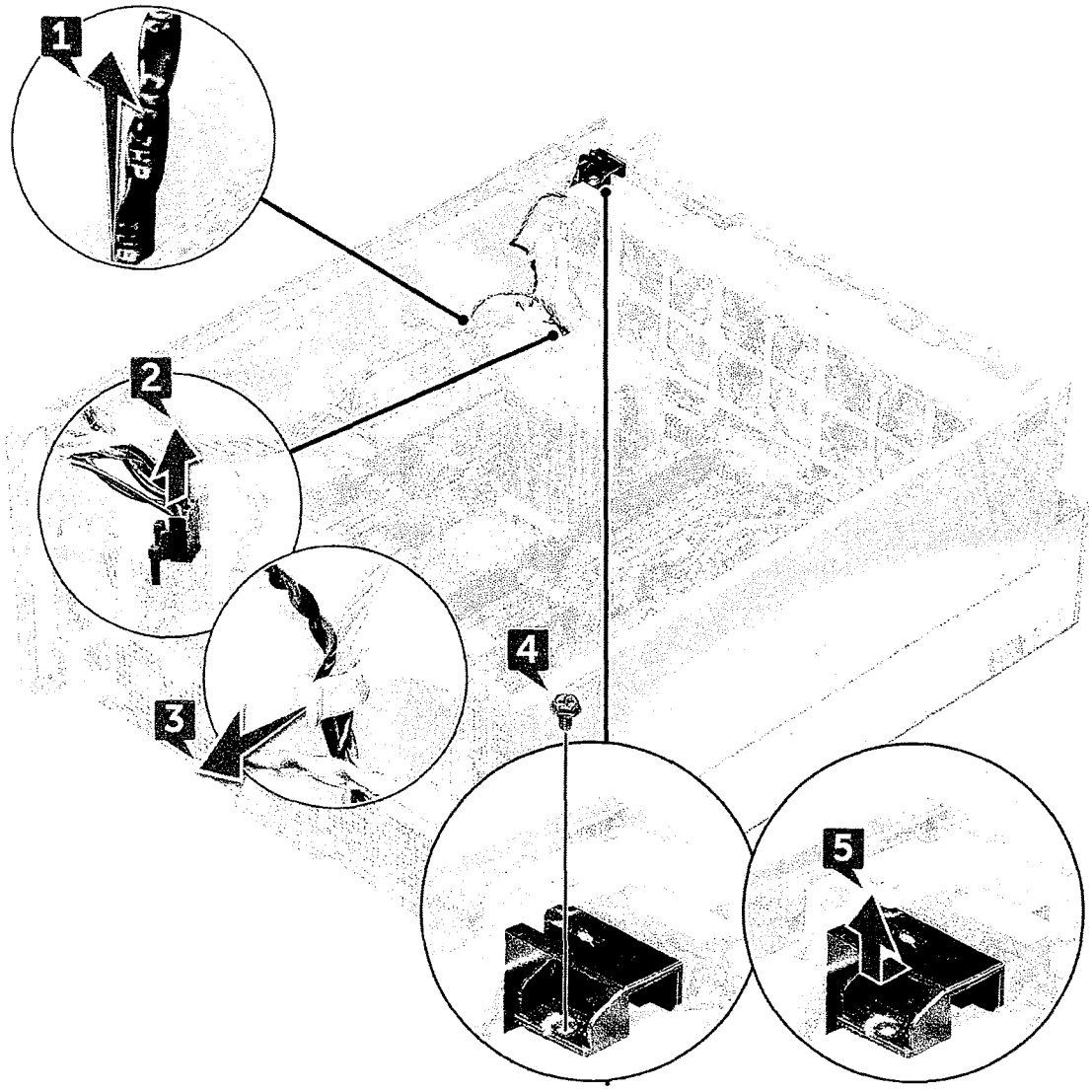

Instalar a chave de violação

1. Coloque o módulo do sensor de violação no slot no conjunto do ventilador frontal do sistema.
2. Para prender o módulo do sensor de violação ao chassi do ventilador frontal do sistema, recoloque o único parafuso no módulo.
3. Passe os cabos do sensor de violação pelo clipe no chassi.
4. Conecte o cabo do sensor de violação à placa de sistema.
5. Empurre para baixo o cabo do sensor de violação inferior em direção ao chassi inferior.
6. Recoloque os seguintes componentes:
   a. suporte da placa gráfica PCIe
   b. defletor de ar
   c. tampa lateral
7. Remova a tampa lateral direita.
8. Empurre para cima o cabo do sensor de violação do chassi superior.
9. Insira e deslize o sensor de violação no respectivo slot do chassi para prendê-lo.
10. Siga o procedimento descrito em Após trabalhar na parte interna do computador.

Conjunto do ventilador frontal do sistema

Como remover o conjunto do ventilador frontal do sistema

1. Siga o procedimento descrito em Antes de trabalhar na parte interna do computador.
2. Remova o seguinte:
   a. tampa lateral
   b. bezel frontal
   c. defletor de ar
   d. suporte da placa PCIe
3. Para remover conjunto do ventilador do sistema:
   a. Remova o único parafuso no módulo do sensor de violação [1] e retire-o do chassi do ventilador do sistema [2].
   b. Desconecte o cabo do alto-falante interno do chassi que está preso ao conector, retire-o passando pelo clipe no chassi do ventilador do sistema [3] e, por fim, remova-o do chassi [4].

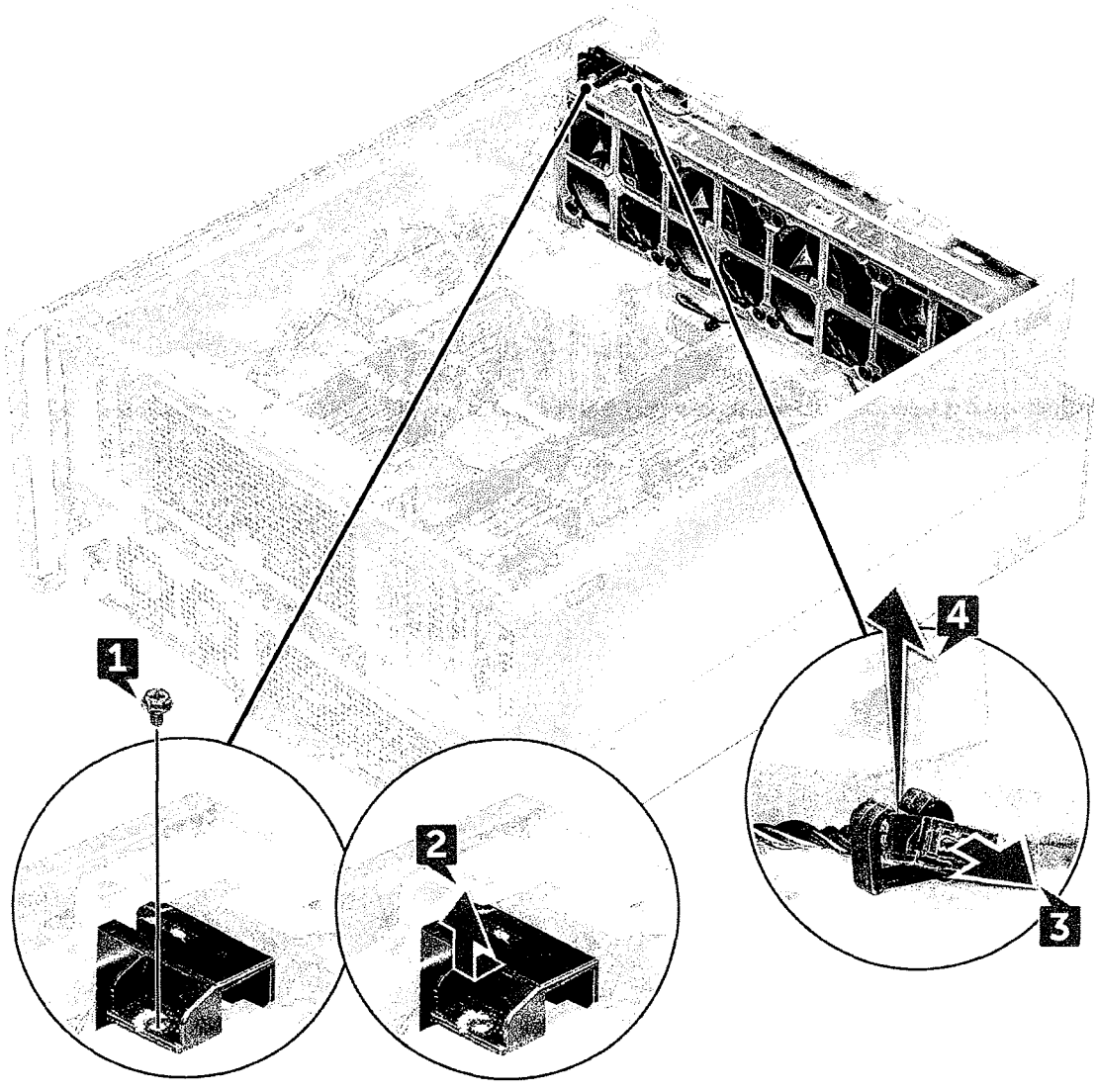

4. Desconecte os quatro cabos do ventilador do sistema dos respectivos conectores na placa de sistema.

   CUIDADO: **Não puxe o conector pelos fios do cabo. Em vez disso, desconecte a extremidade do conector para remover o cabo. Se você puxar os fios do cabo, poderá soltá-los do conector.**

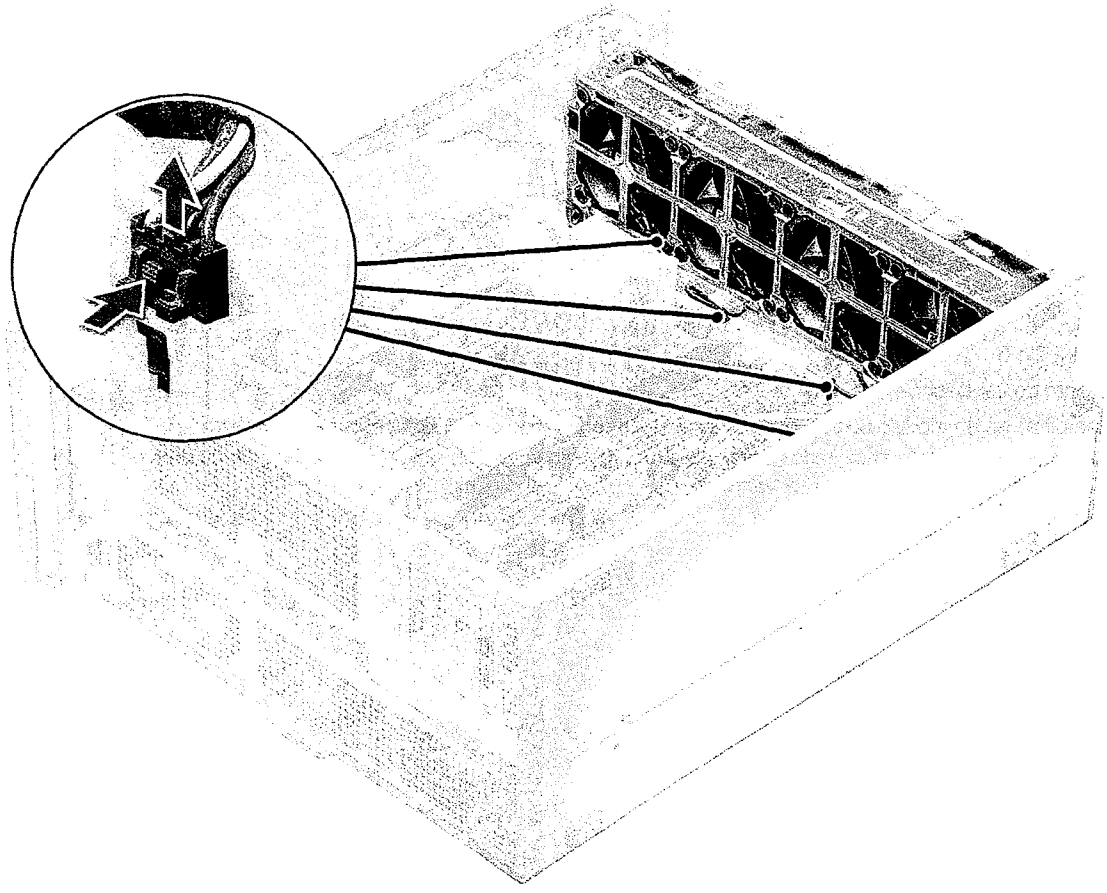

5. Remova os dois parafusos que prendem o chassi do ventilador ao sistema [1] e os dois parafusos que prendem o chassi do ventilador à parte frontal do sistemas [2].

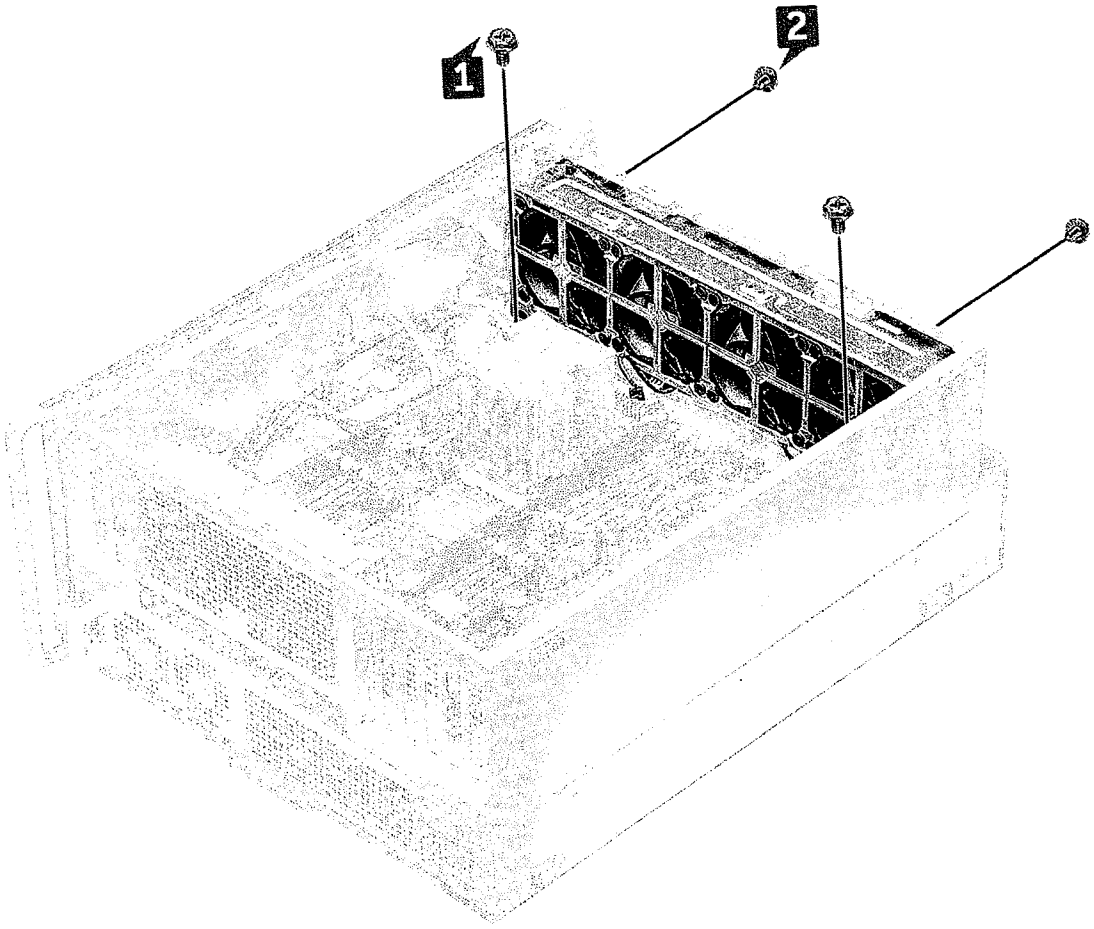

6. Gire e retire o conjunto do ventilador do sistema.

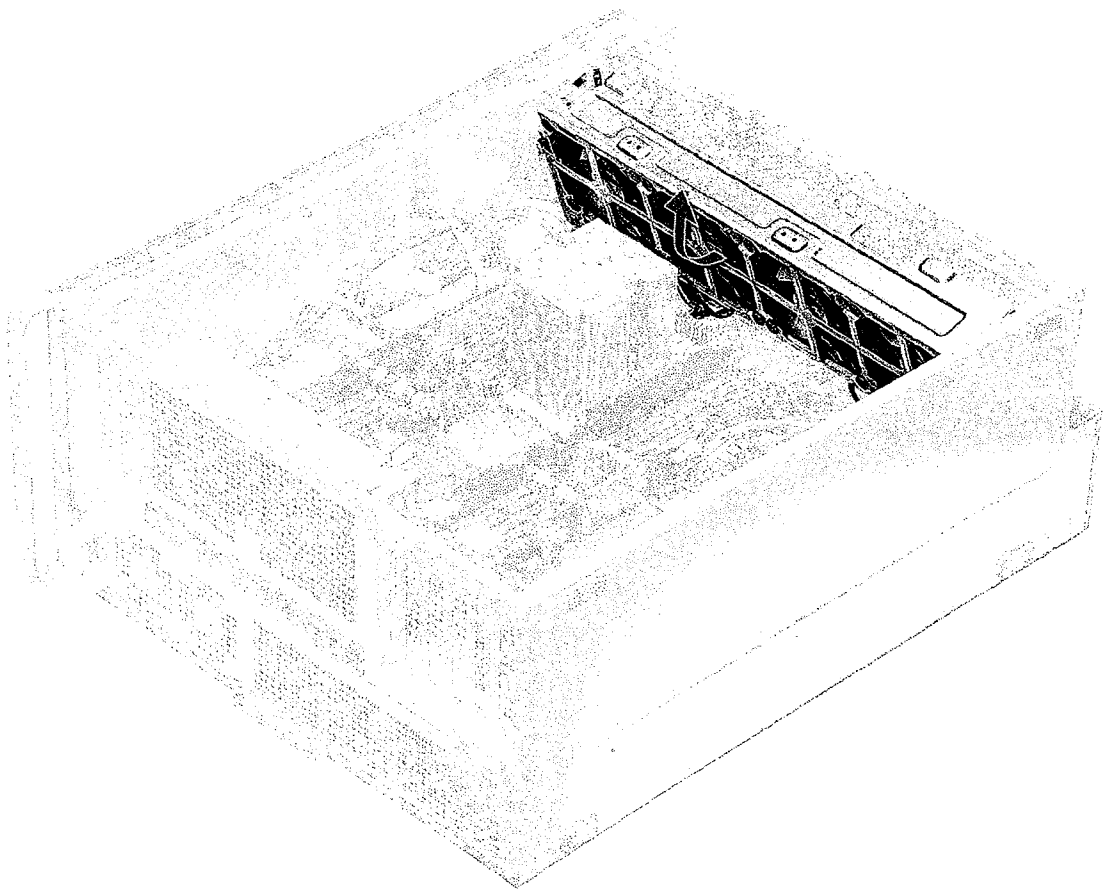

Como instalar o conjunto do ventilador frontal do sistema

1. Segure o ventilador do sistema pelos lados com a extremidade do cabo virada para a parte inferior do chassi.
2. Recoloque os dois parafusos que prendem o conjunto do ventilador do sistema à parte frontal do sistema.
3. Recoloque os dois parafusos que prendem o conjunto do ventilador do sistema ao sistema.
4. Conecte os quatro cabos do ventilador do sistema à placa de sistema.
5. Passe novamente o cabo do alto-falante interno do chassi pelo clipe no conjunto do ventilador do sistema e, em seguida, conecte o alto-falante interno do chassi ao conector.
6. Recoloque o módulo do sensor de violação no slot do conjunto do ventilador e, em seguida, insira o parafuso para prendê-lo ao conjunto do ventilador do sistema.
7. Instale os seguintes componentes:
   a. suporte da placa gráfica PCIe
   b. defletor de ar
   c. bezel frontal
   d. tampa lateral
8. Siga o procedimento descrito em Após trabalhar na parte interna do computador.

Alto-falante do chassi interno

Como remover o alto-falante interno do chassi

1. Execute os procedimentos descritos em Antes de trabalhar na parte interna do computador.
2. Remova o seguinte:

a. tampa lateral
b. painel frontal

3. Para remover o alto-falante do chassi interno:
   a. Desconecte uma extremidade do cabo do alto-falante do chassi interno do conector na placa de sistema [1].
   b. Retire o cabo do alto-falante do chassi interno do clipe na montagem do ventilador do sistema.
4. Pressione e segure as abas [2] em ambos os lados do alto-falante interno do chassi para deslizar e removê-lo do sistema [3].

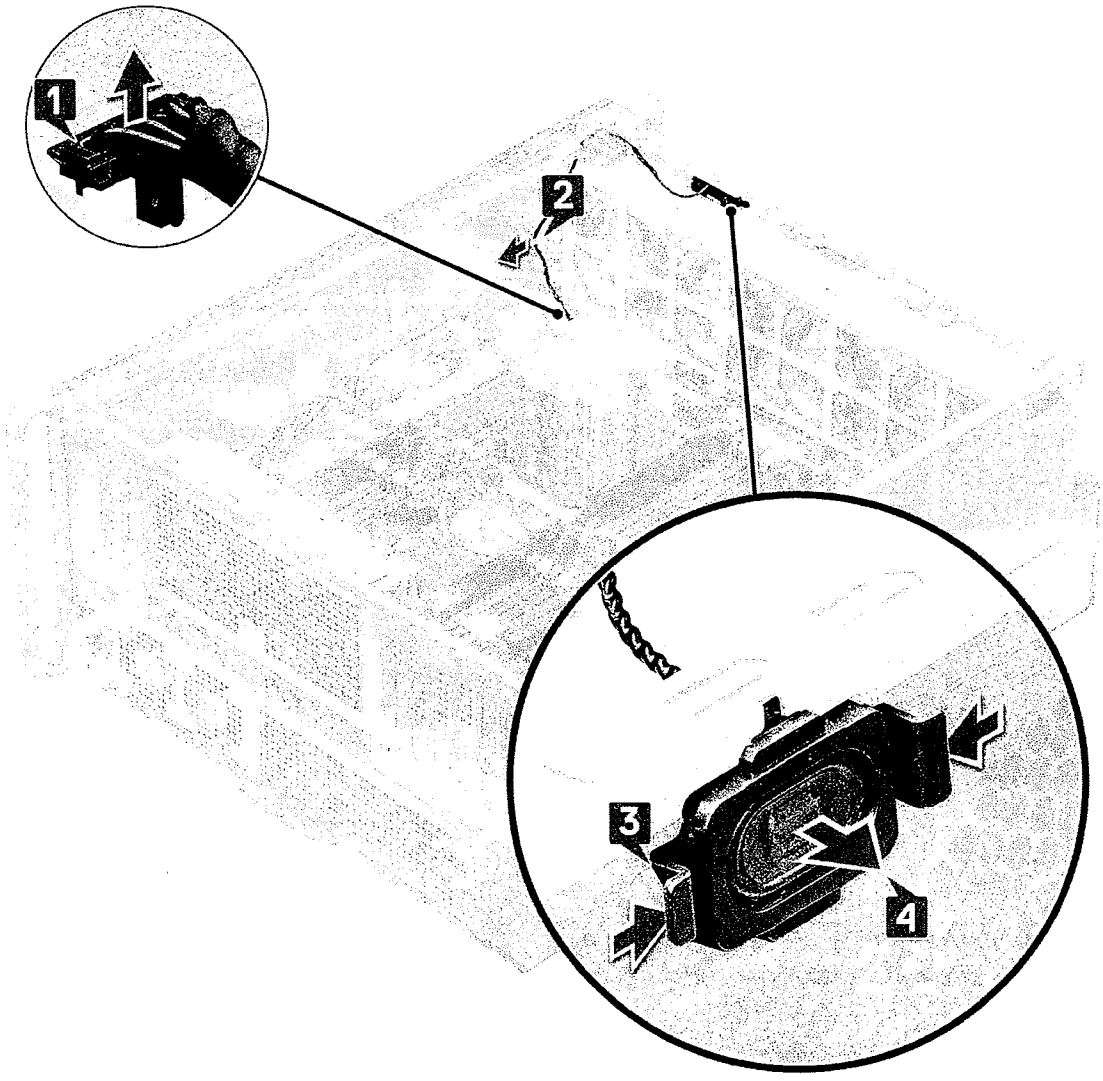

Como instalar o alto-falante interno do chassi

1. Pressione e mantenha pressionadas as abas nas laterais do alto-falante interno do chassi e, em seguida, deslize o módulo do alto-falante em direção ao slot para prendê-lo ao sistema.
2. Passe o cabo do alto-falante interno do chassi pelo clipe no conjunto do ventilador do sistema.
3. Conecte a extremidade do cabo do alto-falante interno do chassi ao conector no conjunto do ventilador do sistema.
4. Instale os seguintes componentes:
   a. defletor de ar
   b. bezel frontal
   c. tampa lateral
5. Siga o procedimento descrito em Após trabalhar na parte interna do computador.

Bezel do disco rígido e da unidade óptica

Como remover o painel do HDD

1. Siga o procedimento descrito em Antes de trabalhar na parte interna do computador.
2. Remova os seguintes componentes:
   a. tampa lateral
   b. bezel frontal
3. Para remover o bezel do HDD:
   a. Pressione o botão de destravamento azul [1], localizado próximo ao conjunto do ventilador frontal do sistema.
   b. Deslize a trava [2] no bezel de I/O frontal para soltar o bezel do HDD do chassi [3].

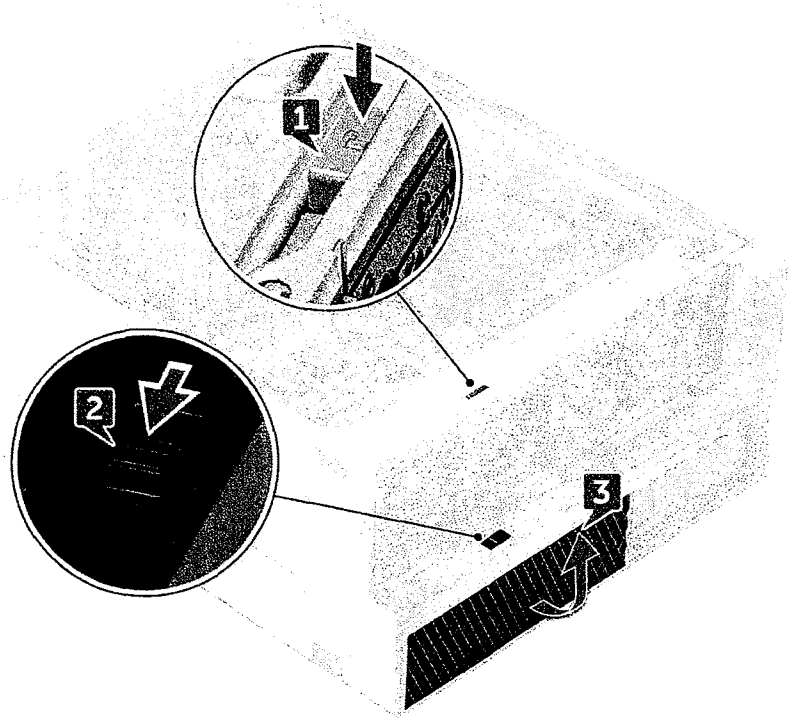

   c. Gire e retire o bezel do HDD do chassi [3].
4. Opcional: remova o painel da unidade de disco óptico do chassi, erguendo as bordas do painel e levantando-o.

Como instalar o painel do HDD

1. Se o painel do ODD for removido, instale-o, alinhando o entalhe do painel dentro do slot no chassi (Opcional).
2. Alinhe o bezel do HDD aos seus respectivos slots no chassi e pressione-o contra o chassi.
3. Pressione o botão de travamento azul, localizado próximo ao conjunto do ventilador frontal do sistema, para prender o bezel do HDD ao chassi.
4. Instale os seguintes componentes:
   a. bezel frontal
   b. tampa lateral
5. Siga o procedimento descrito em Após trabalhar na parte interna do computador.